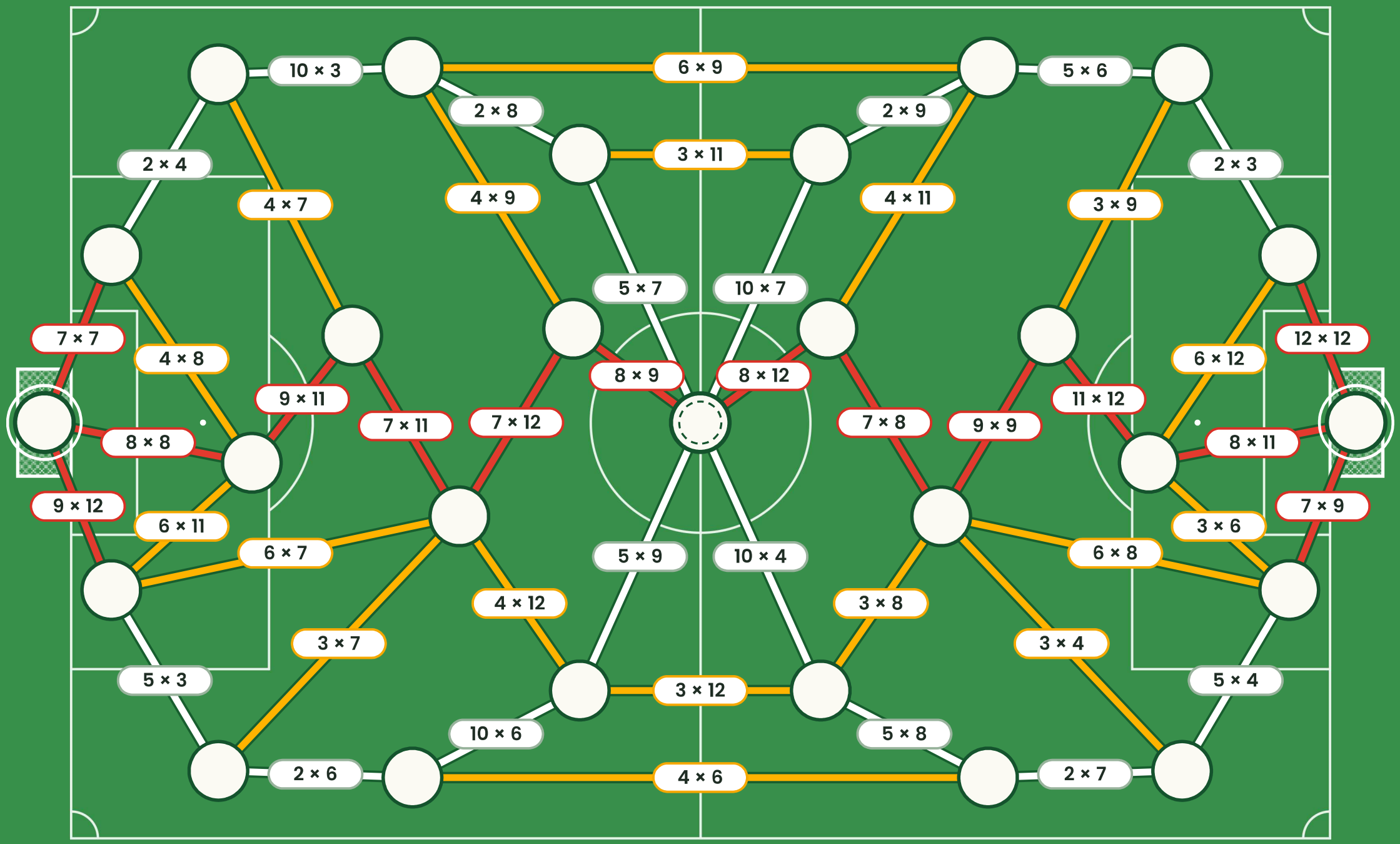

rethink maths

GLOBAL MATHS TROPHY · MIXED TABLES

Global Maths Trophy

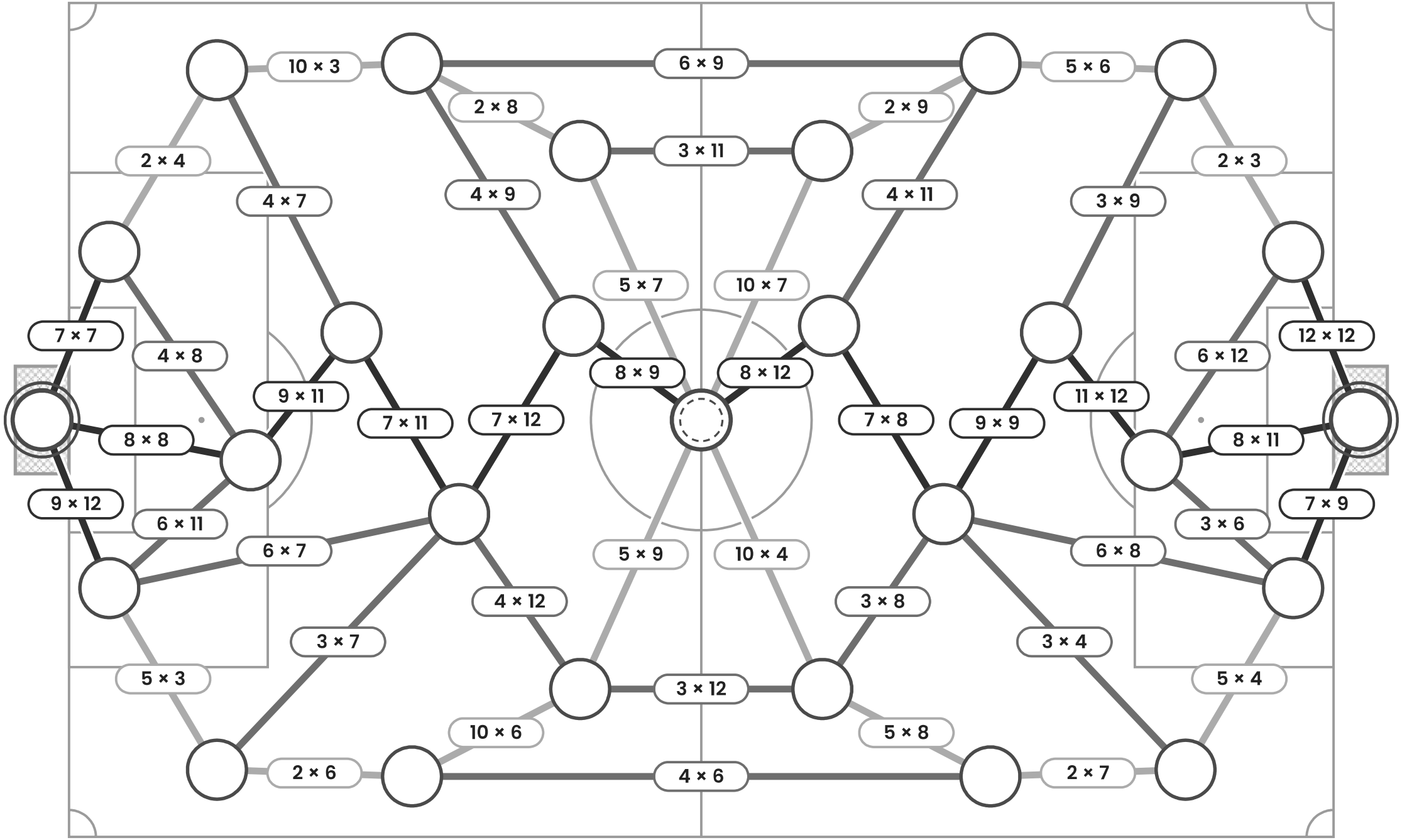

rethink maths

GLOBAL MATHS TROPHY · MIXED TABLES

Global Maths Trophy

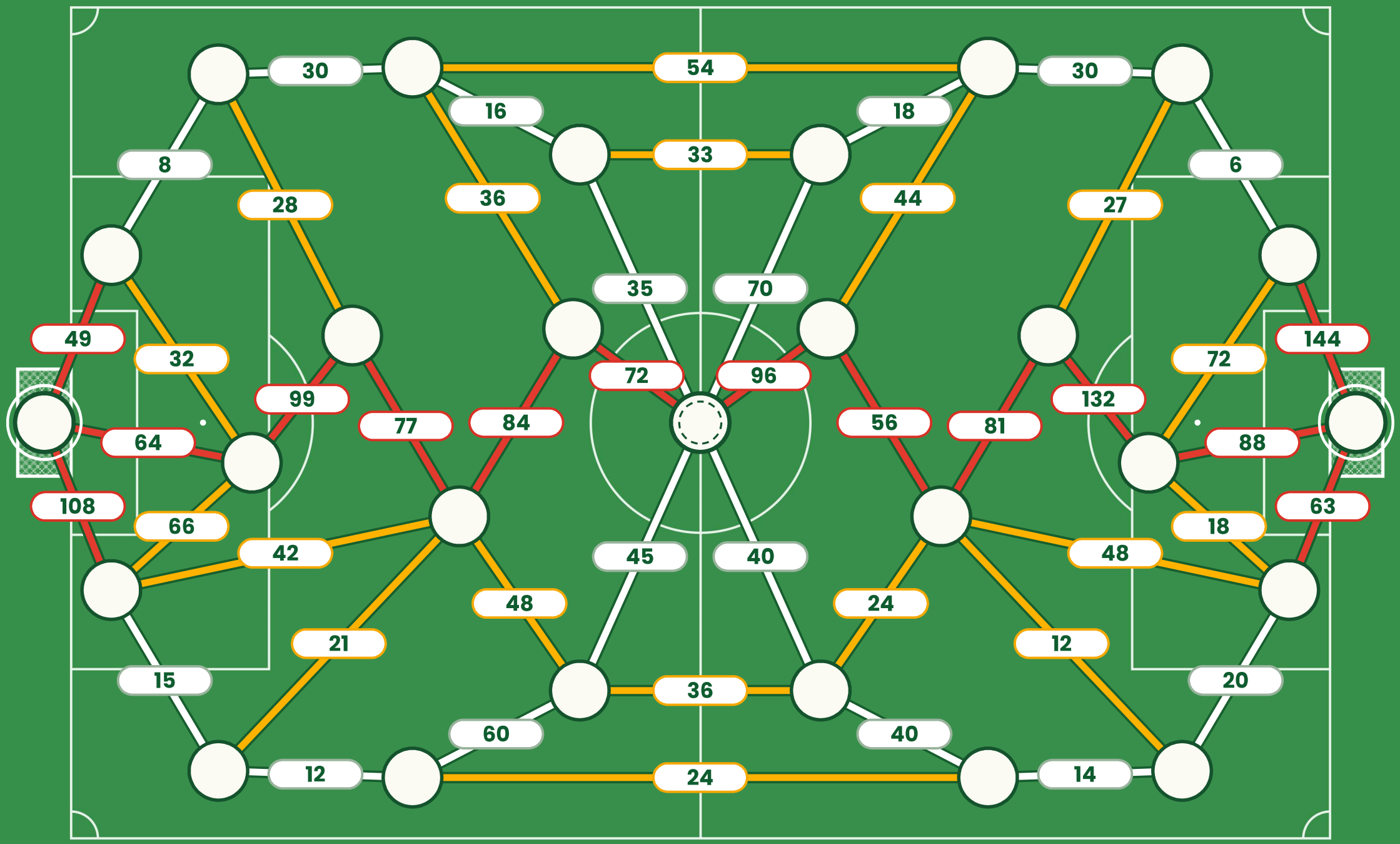

rethink maths

GLOBAL MATHS TROPHY · MIXED · ANSWERS

Global Maths Trophy