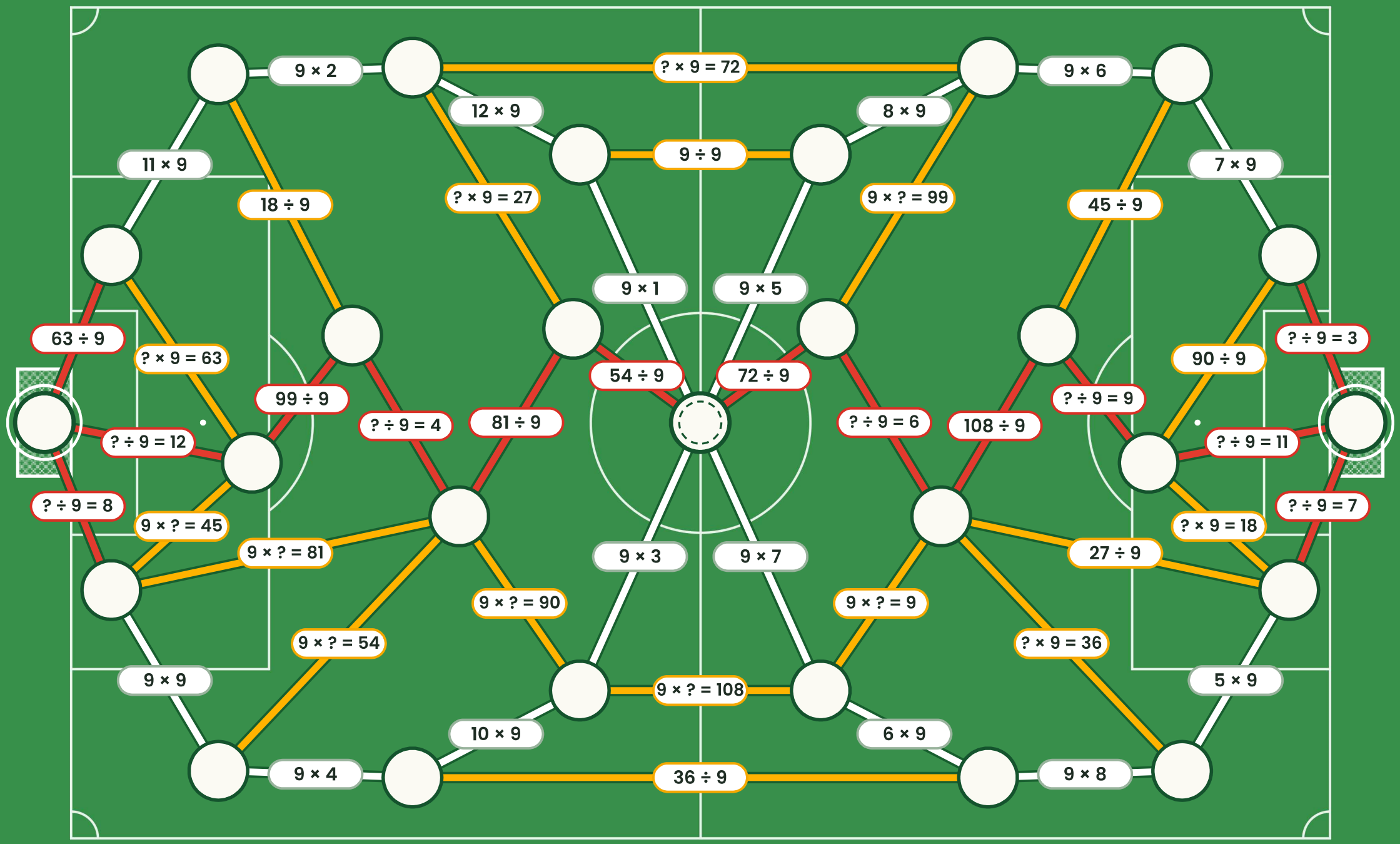

rethink maths

GLOBAL MATHS TROPHY · 9s FACTS

Global Maths Trophy

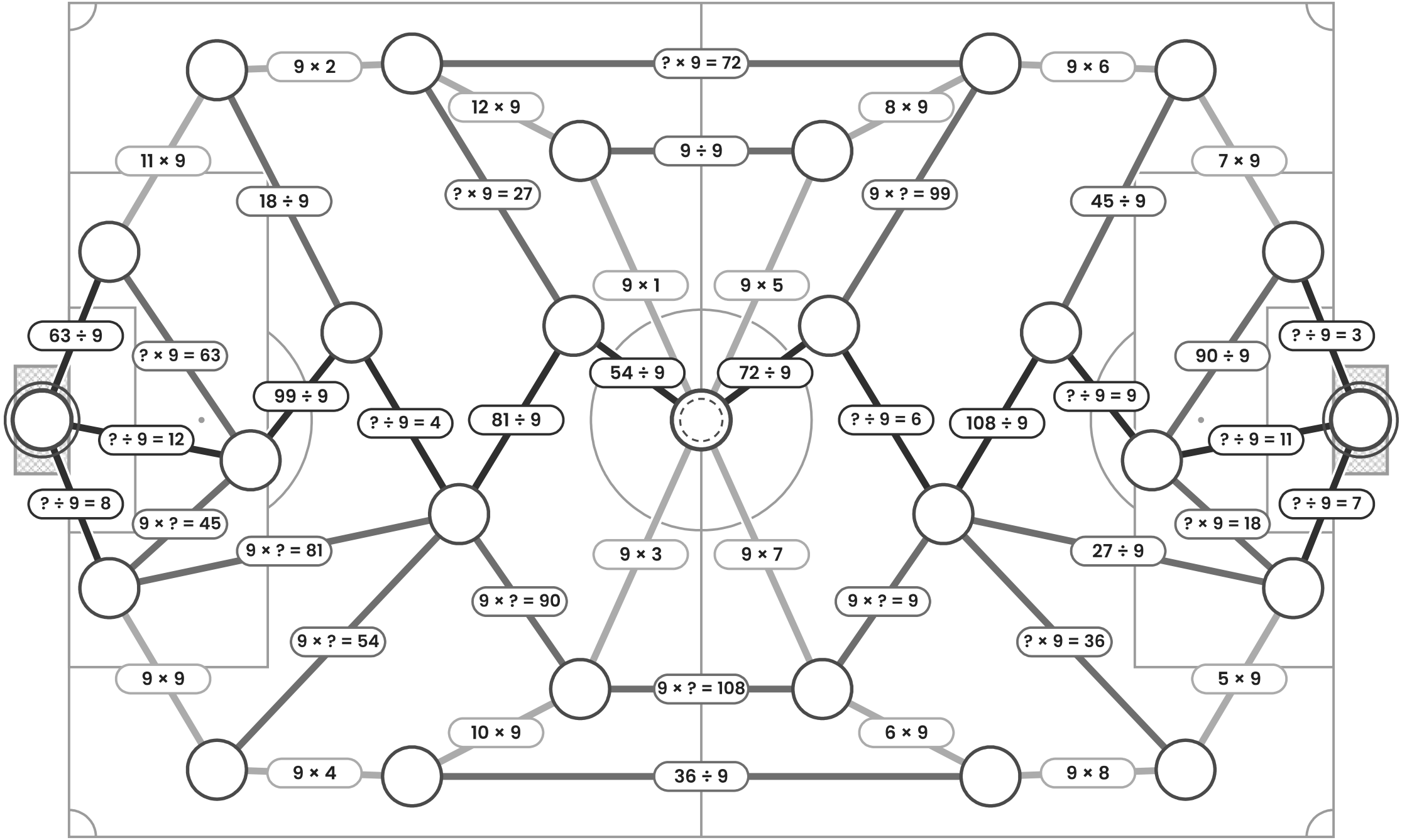

rethink maths

GLOBAL MATHS TROPHY · 9s FACTS

Global Maths Trophy

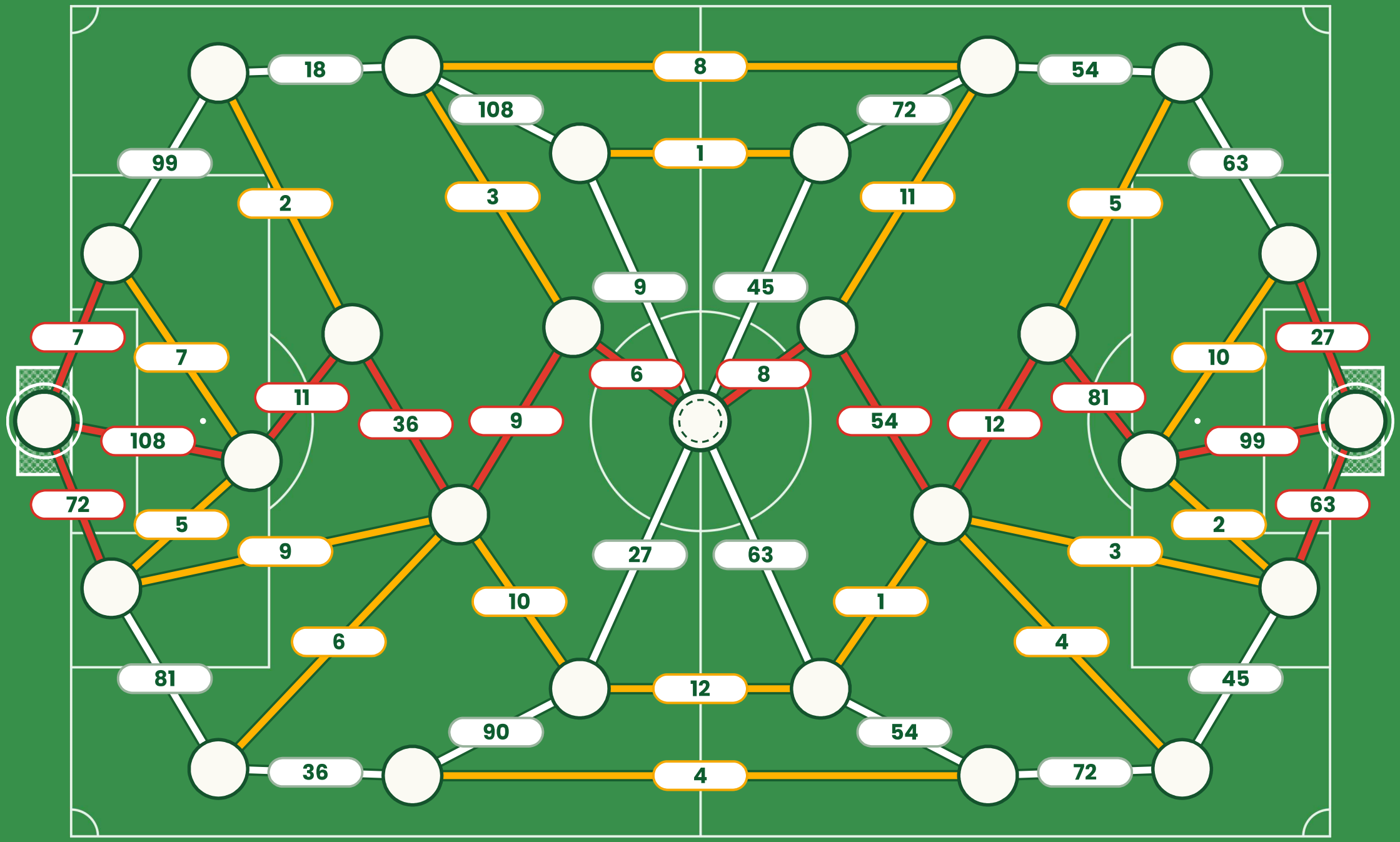

rethink maths

GLOBAL MATHS TROPHY · 9s ANSWERS

Global Maths Trophy