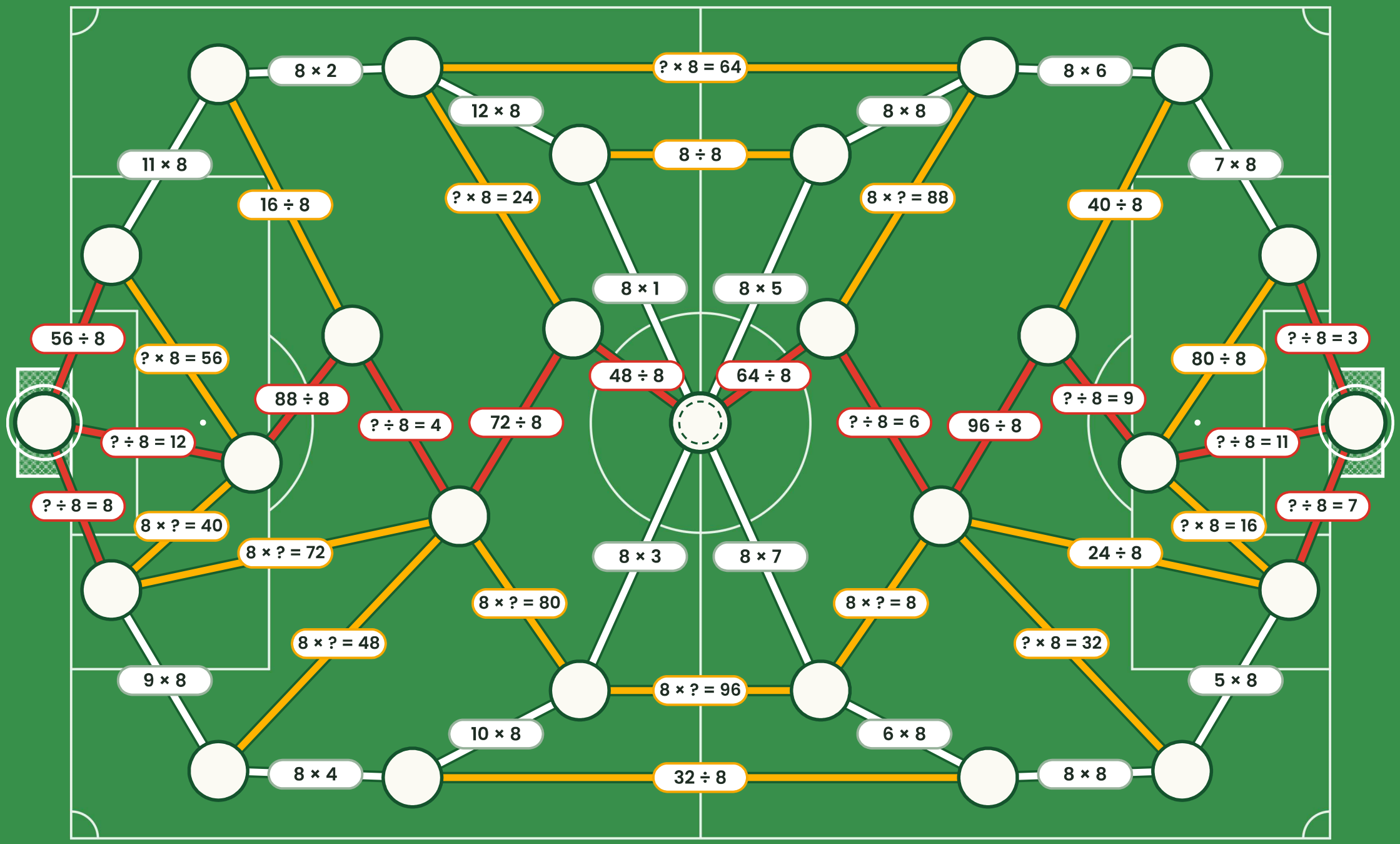

rethink maths

GLOBAL MATHS TROPHY · 8s FACTS

Global Maths Trophy

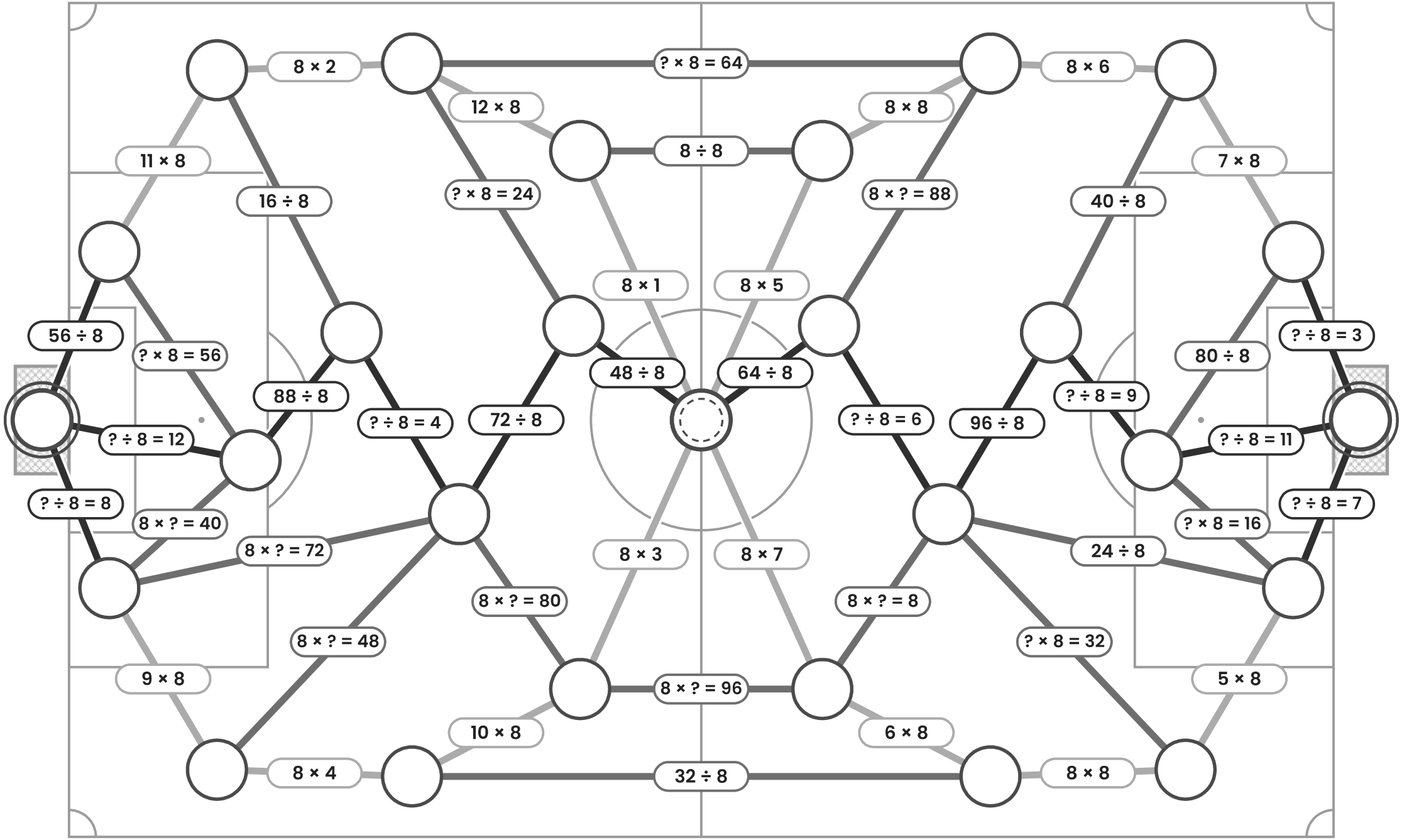

rethink maths

GLOBAL MATHS TROPHY · 8s FACTS

Global Maths Trophy

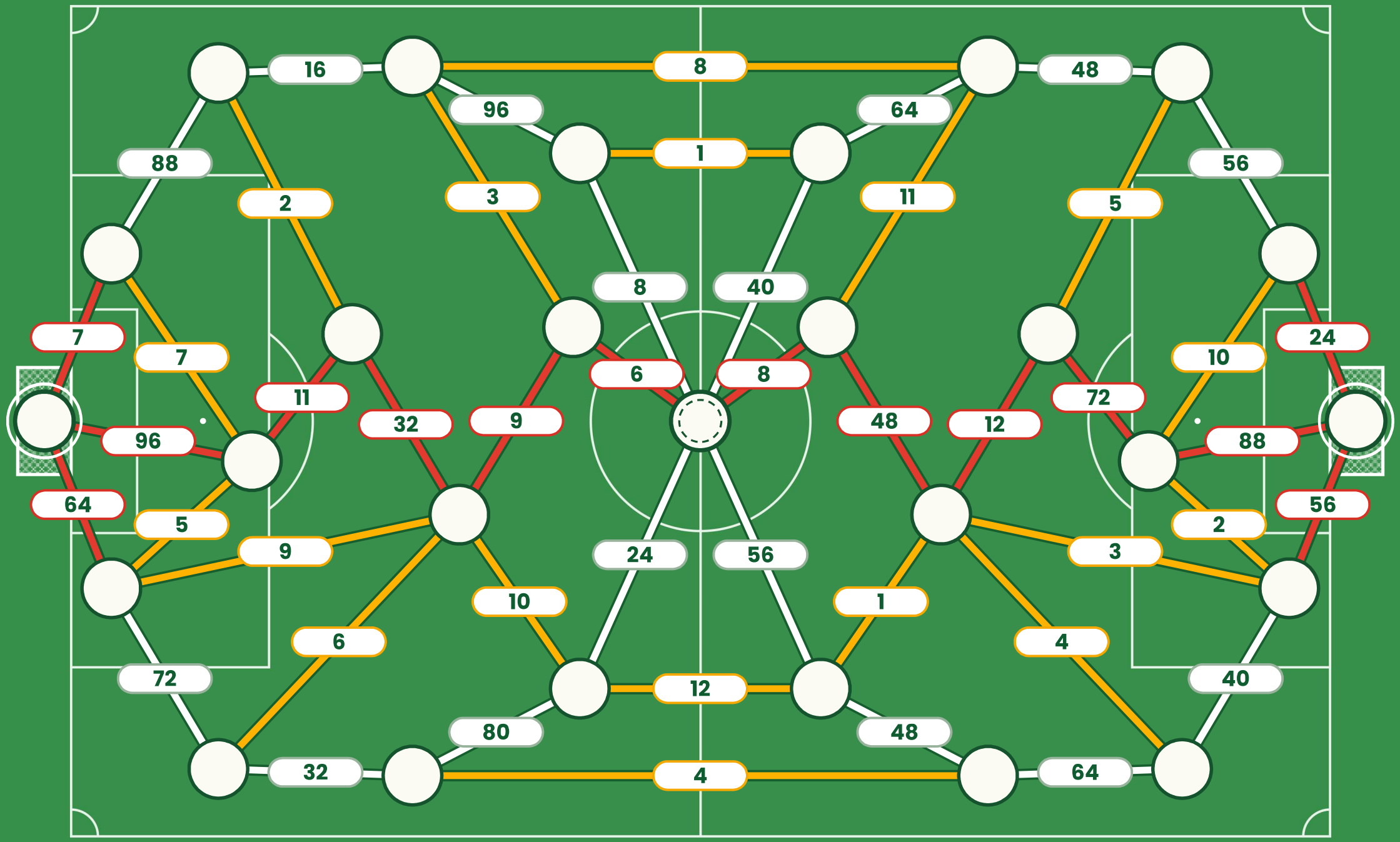

rethink maths

GLOBAL MATHS TROPHY · 8s ANSWERS

Global Maths Trophy