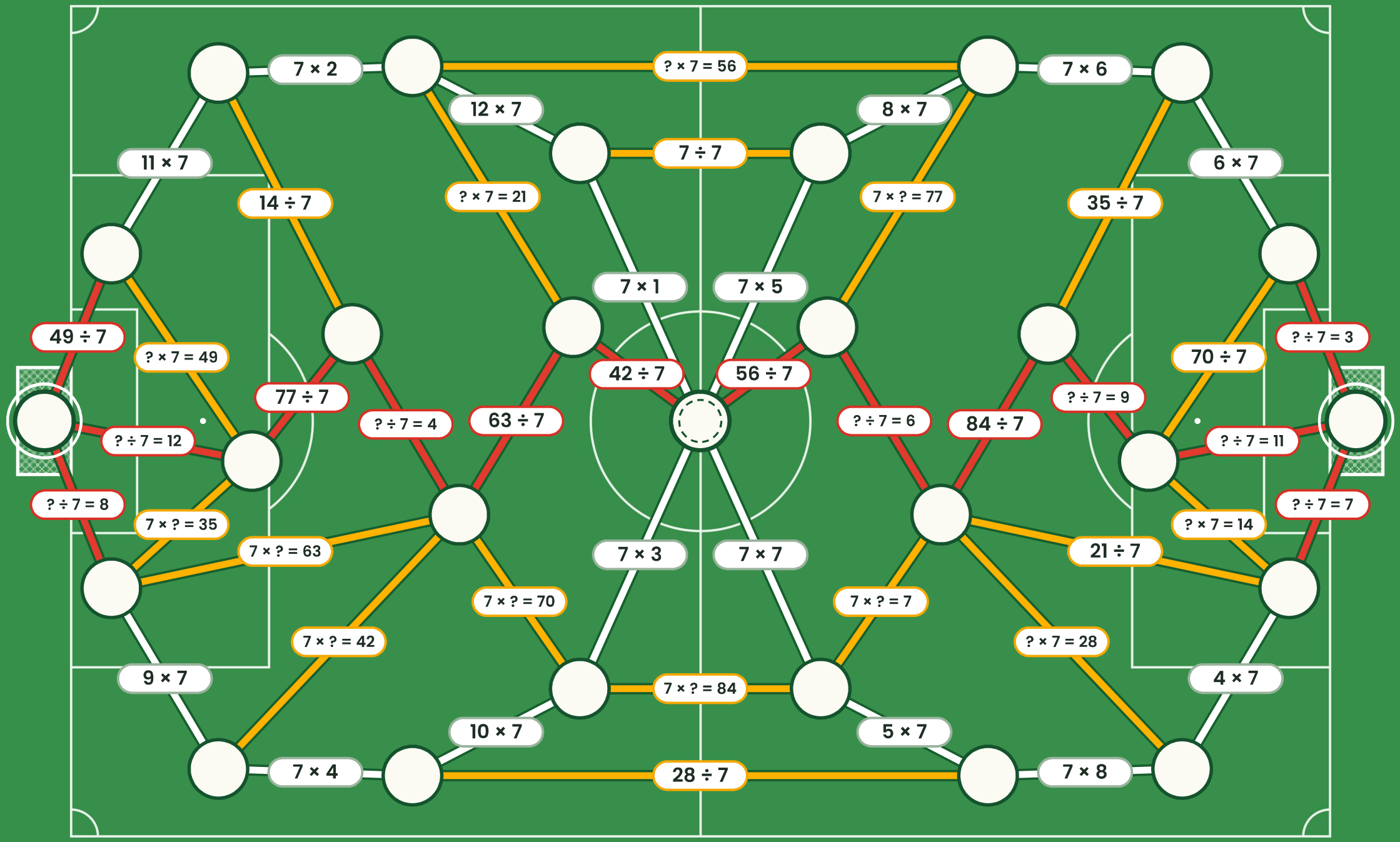

rethink maths

GLOBAL MATHS TROPHY · 7s FACTS

Global Maths Trophy

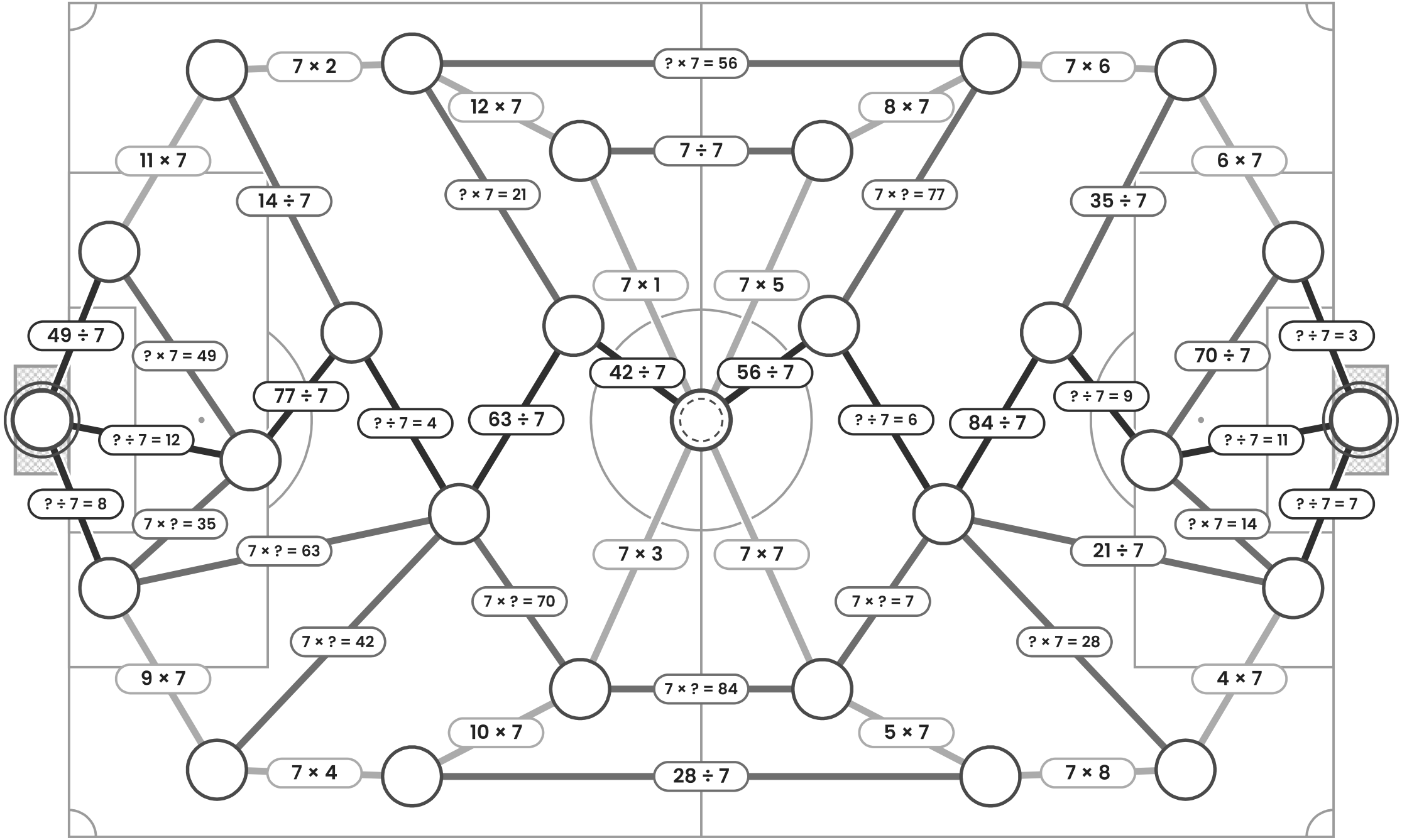

rethink maths

GLOBAL MATHS TROPHY · 7s FACTS

Global Maths Trophy

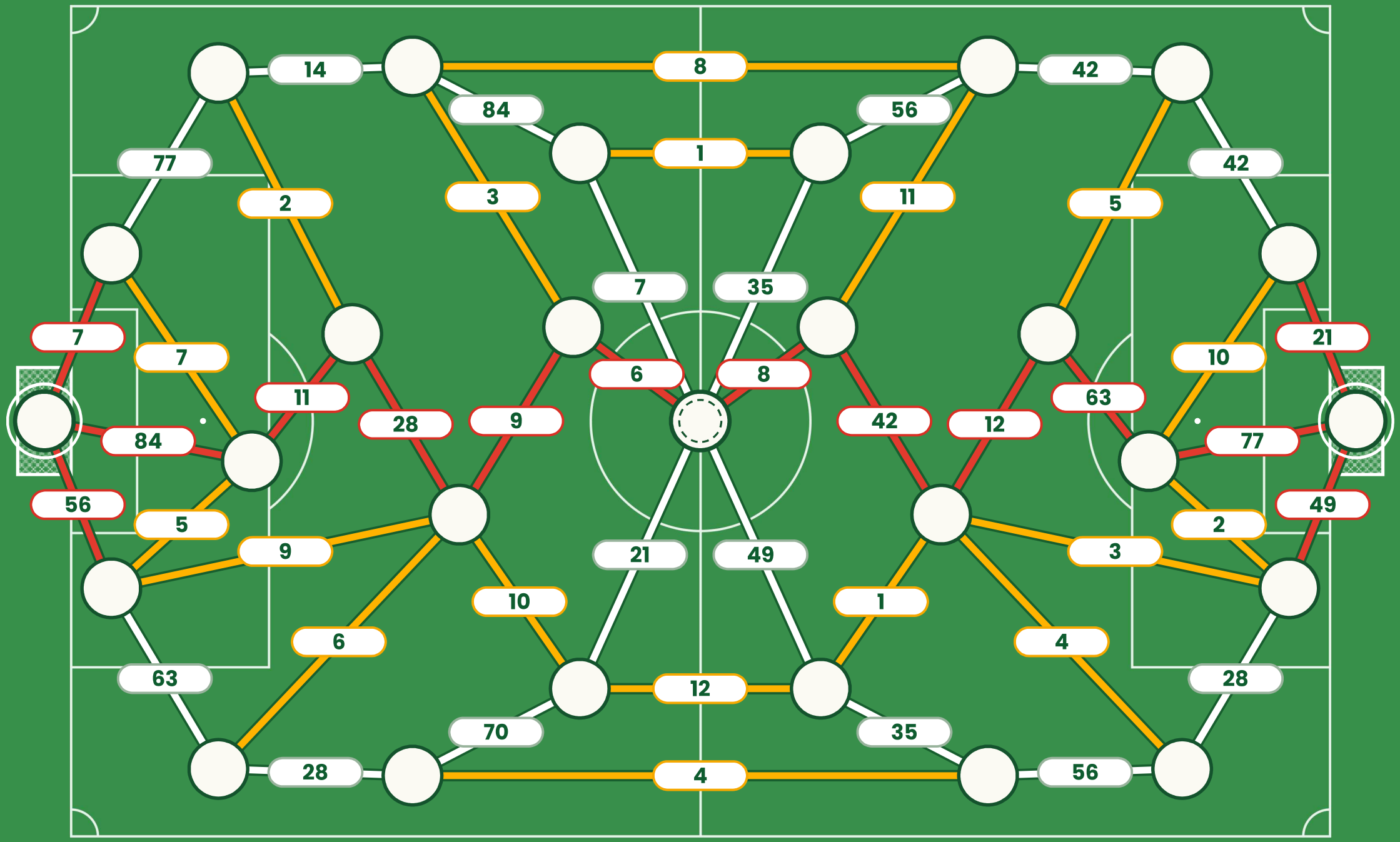

rethink maths

GLOBAL MATHS TROPHY · 7s ANSWERS

Global Maths Trophy