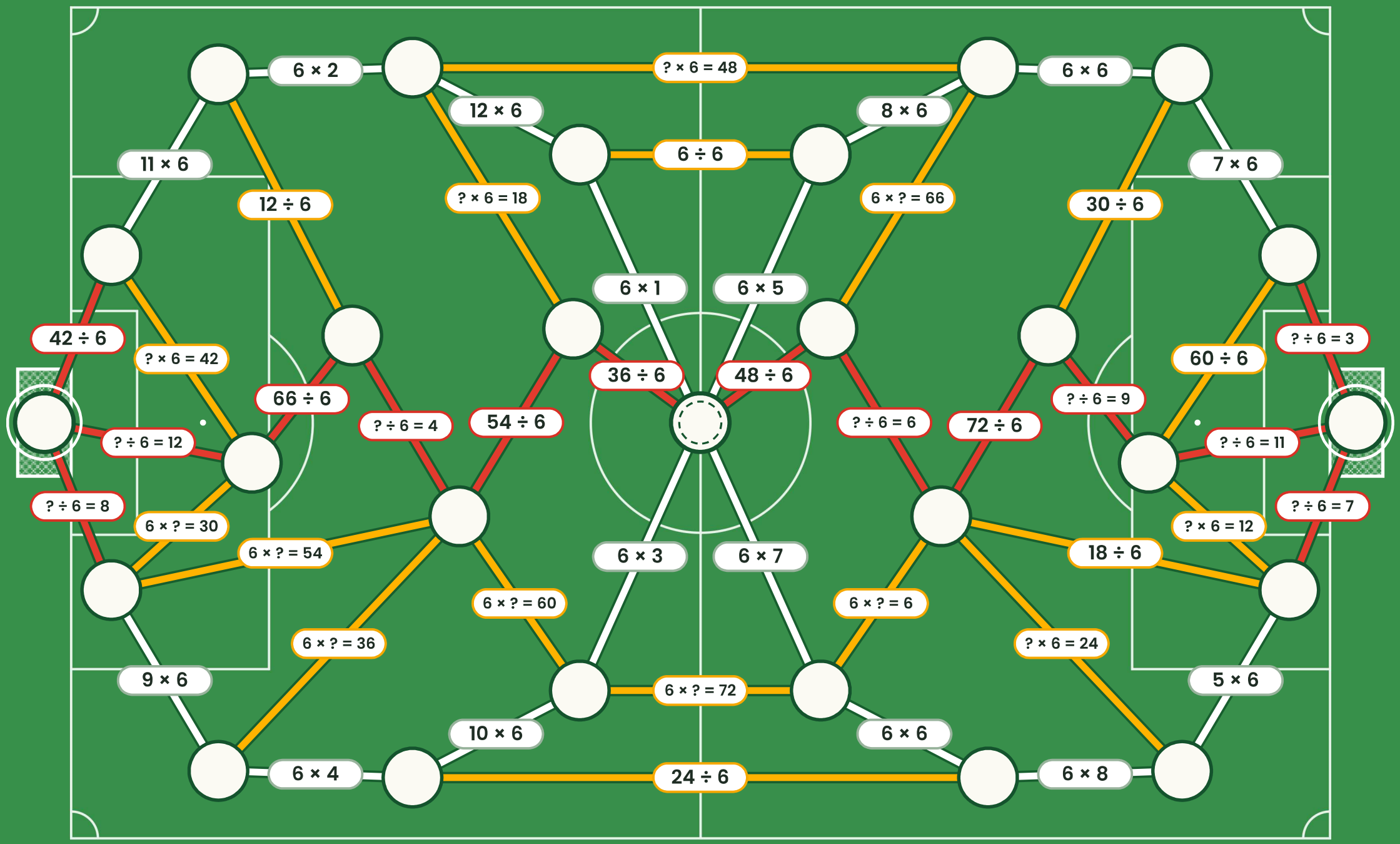

rethink maths

GLOBAL MATHS TROPHY · 6s FACTS

Global Maths Trophy

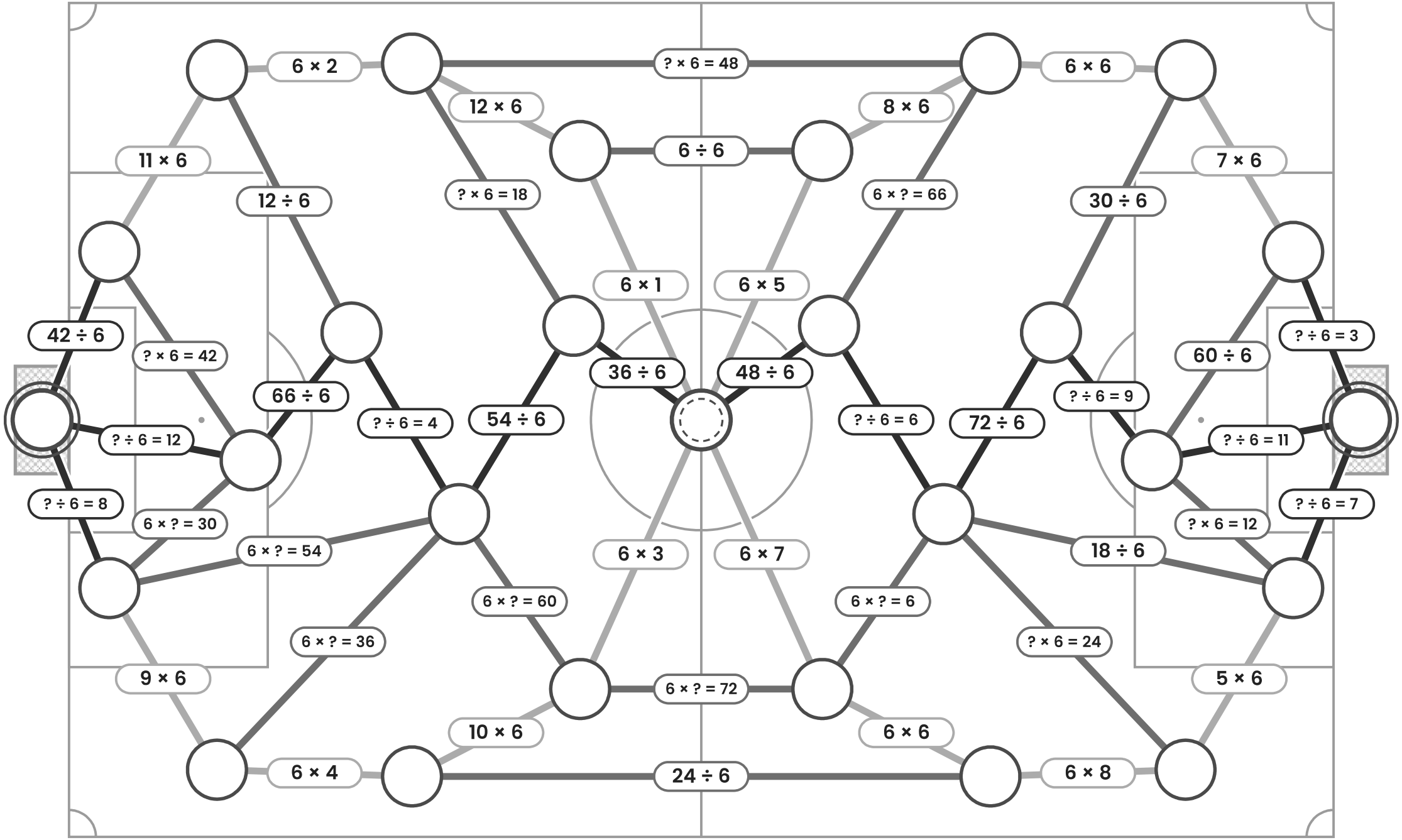

rethink maths

GLOBAL MATHS TROPHY · 6s FACTS

Global Maths Trophy

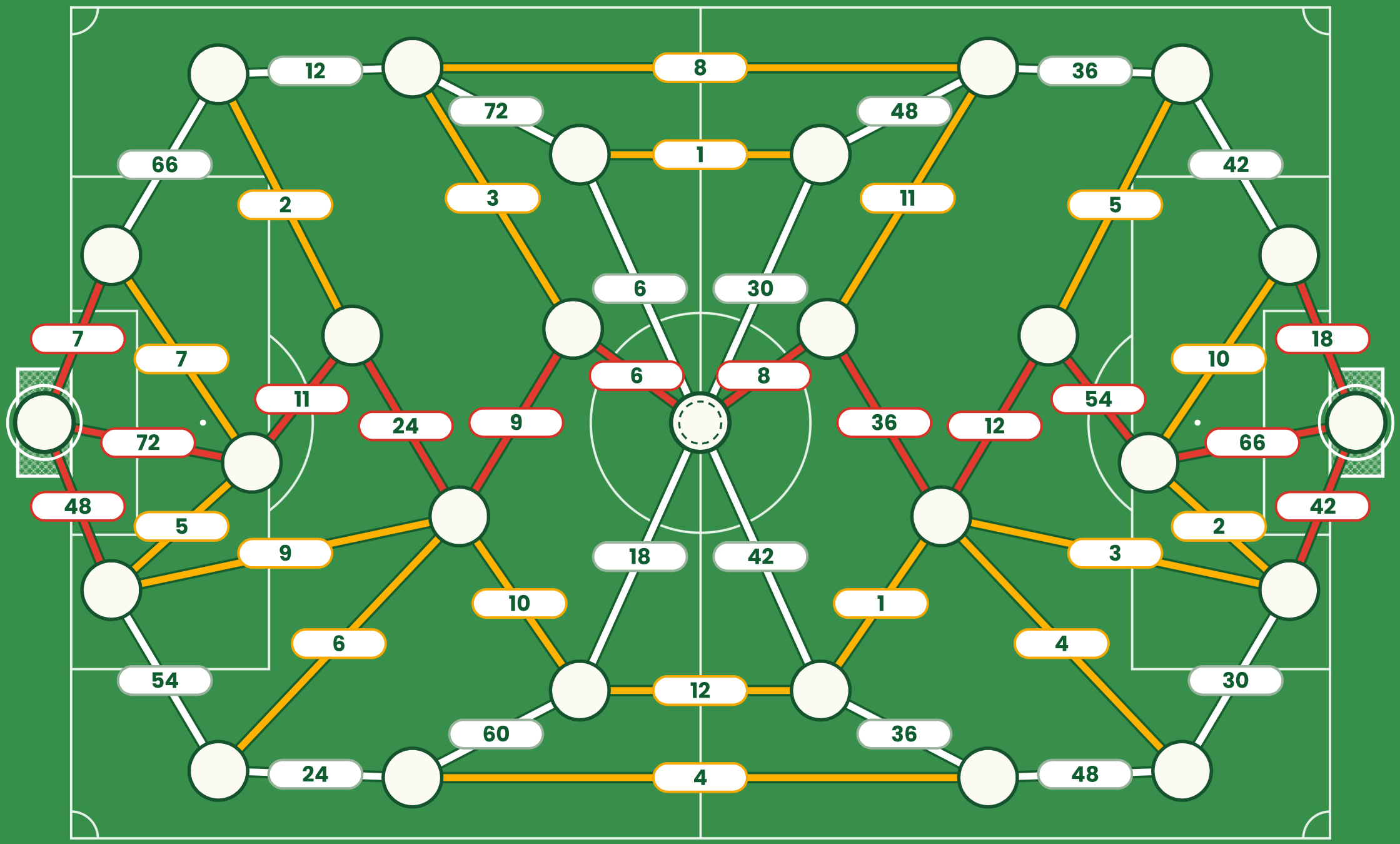

rethink maths

GLOBAL MATHS TROPHY · 6s ANSWERS

Global Maths Trophy