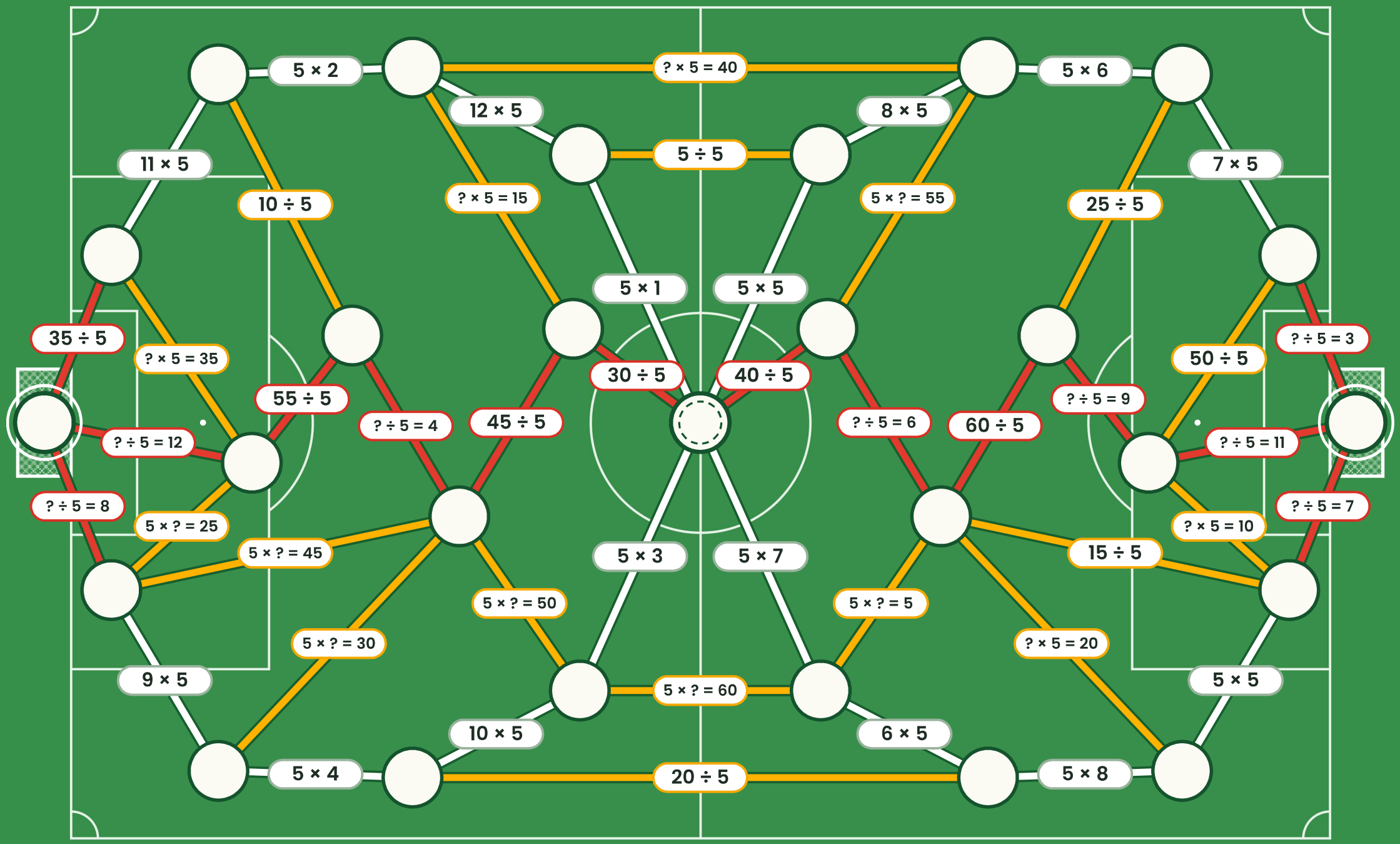

rethink maths

GLOBAL MATHS TROPHY · 5s FACTS

Global Maths Trophy

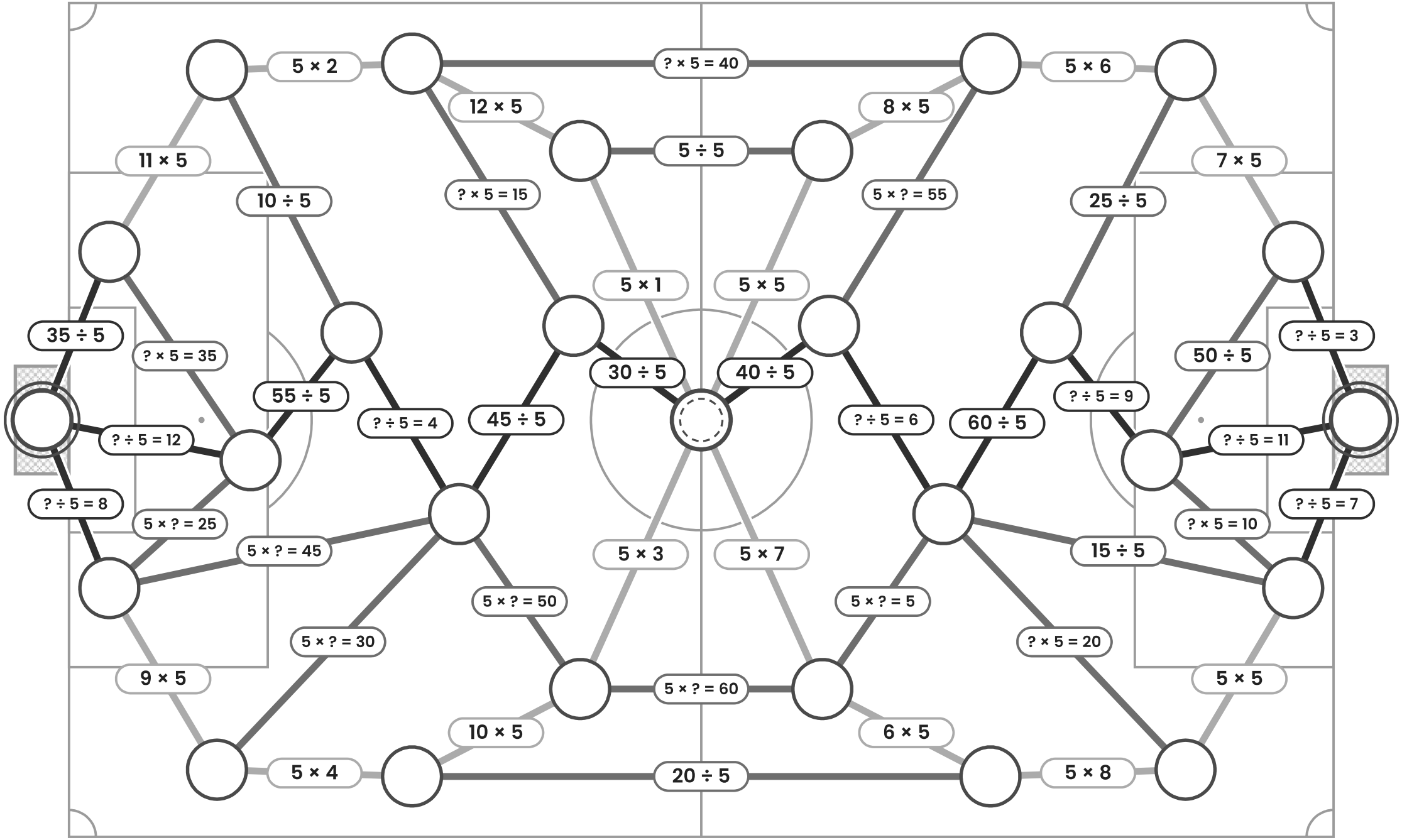

rethink maths

GLOBAL MATHS TROPHY · 5s FACTS

Global Maths Trophy

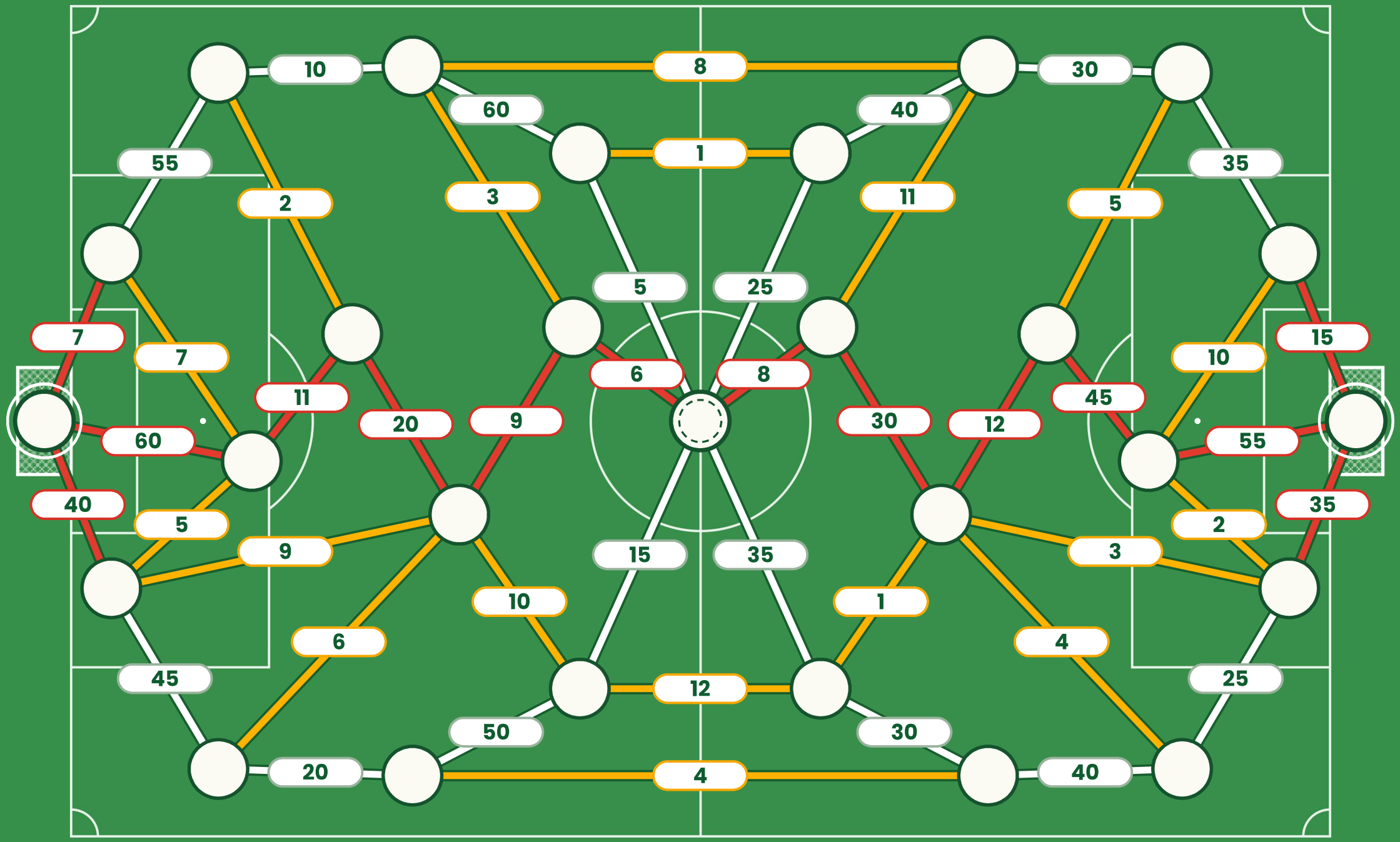

rethink maths

GLOBAL MATHS TROPHY · 5s ANSWERS

Global Maths Trophy