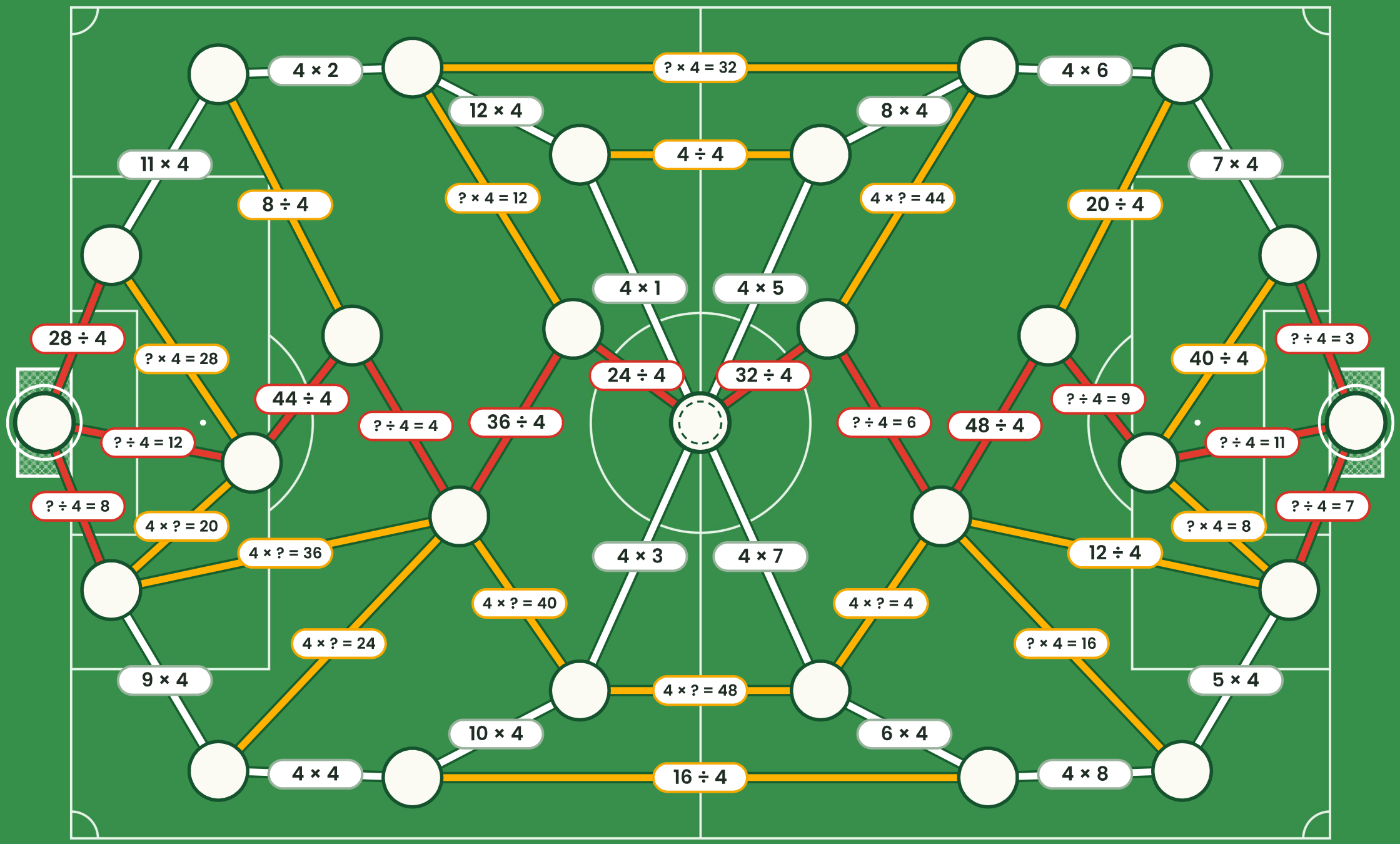

rethink maths

GLOBAL MATHS TROPHY · 4s FACTS

Global Maths Trophy

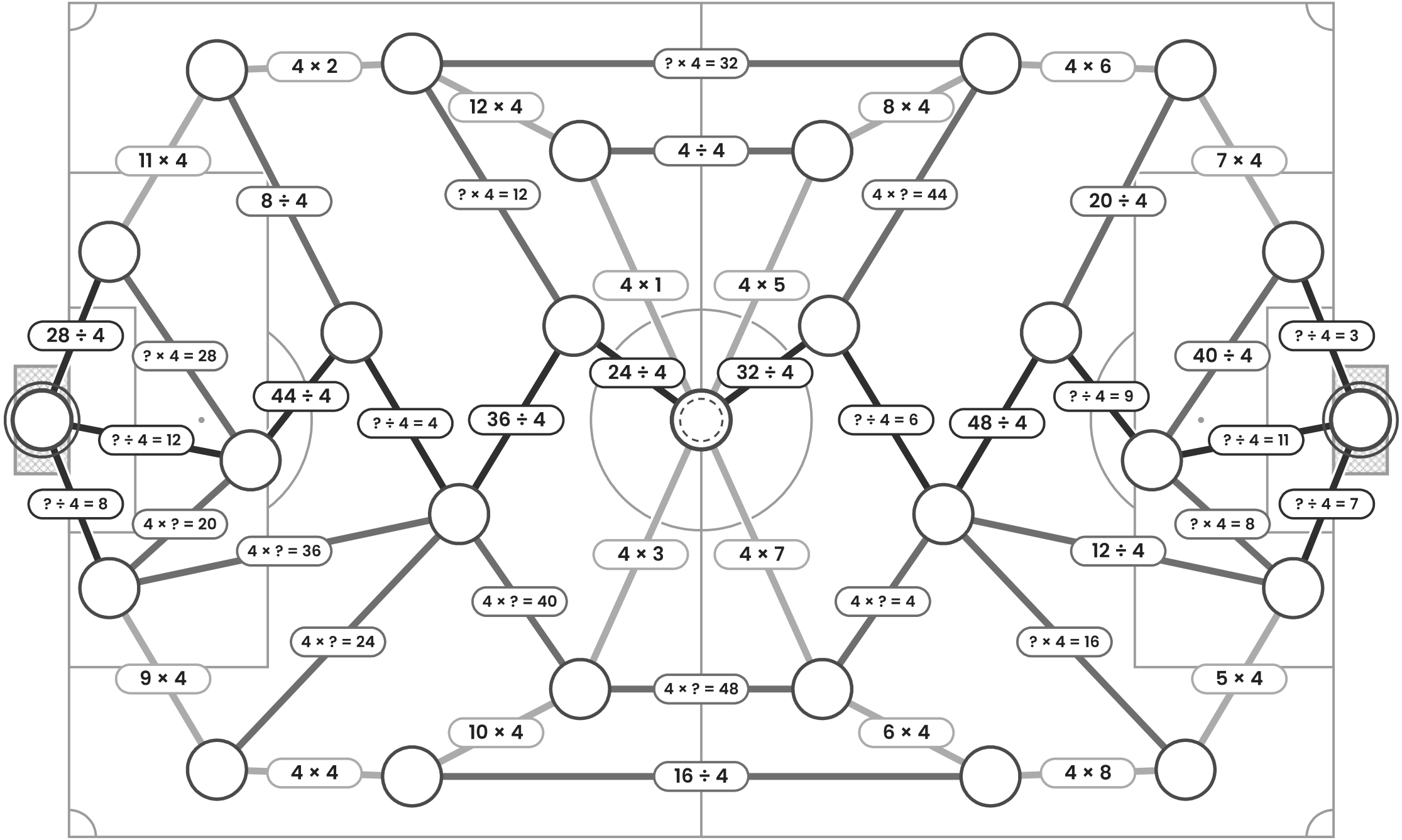

rethink maths

GLOBAL MATHS TROPHY · 4s FACTS

Global Maths Trophy

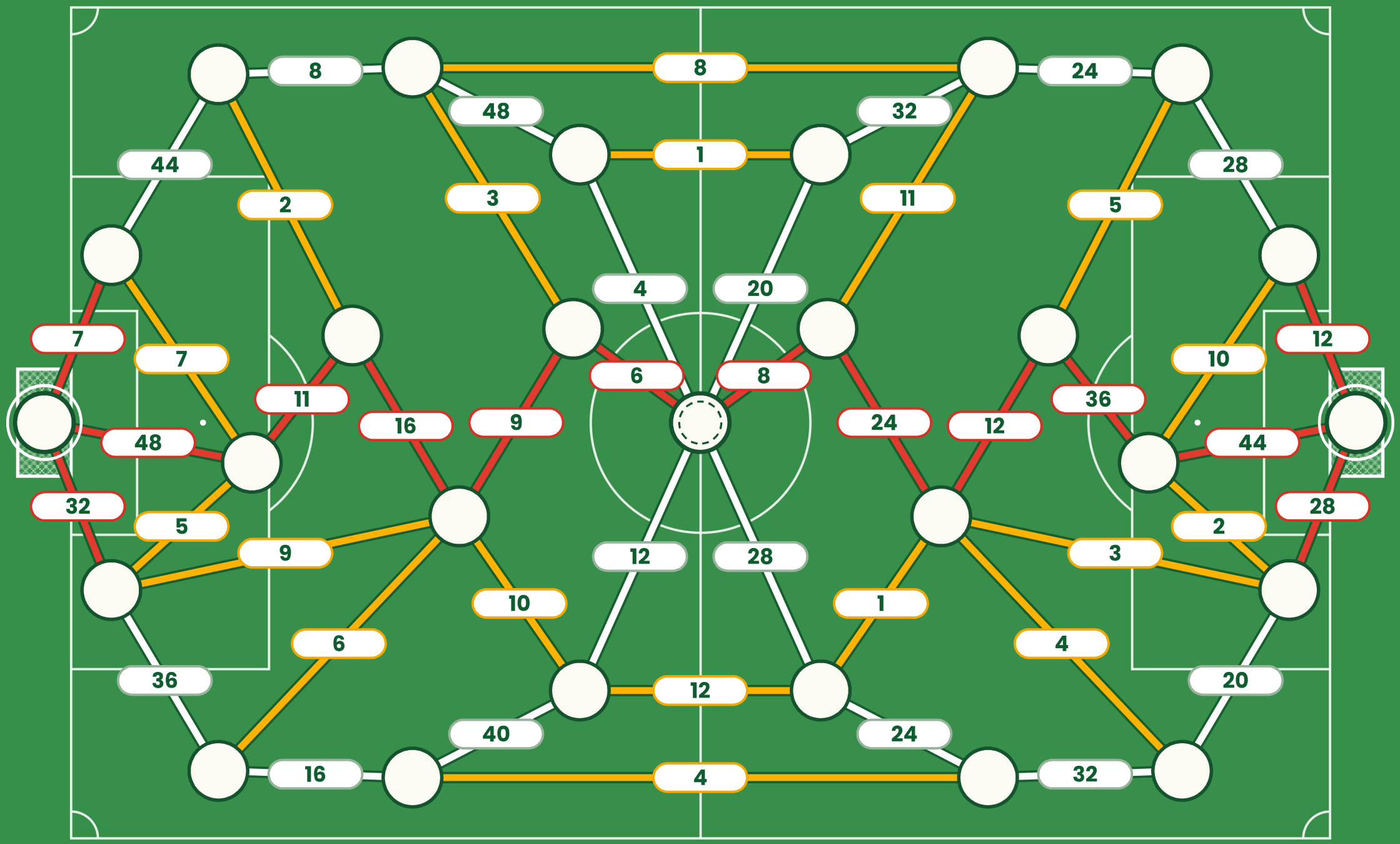

rethink maths

GLOBAL MATHS TROPHY · 4s ANSWERS

Global Maths Trophy