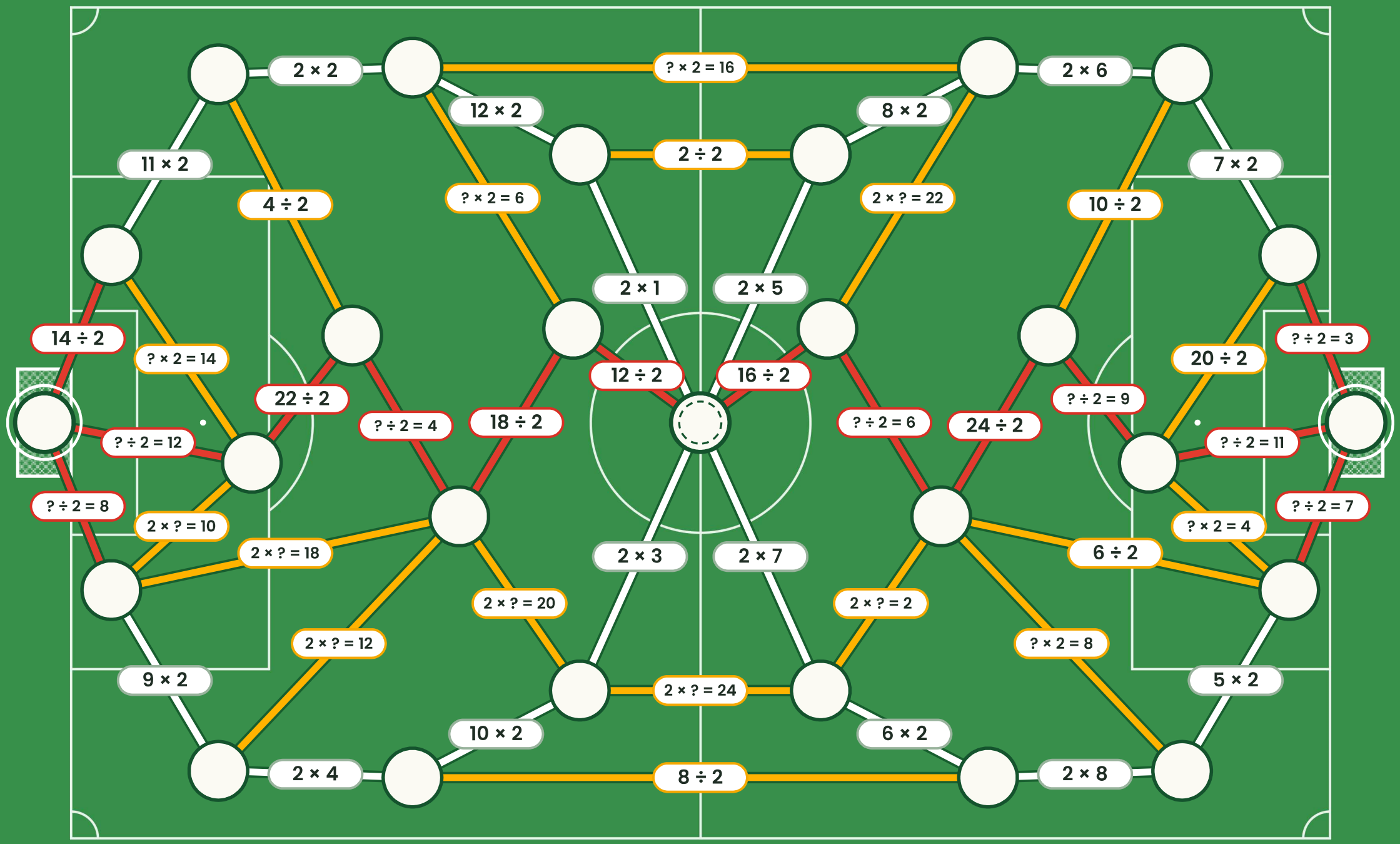

rethink maths

GLOBAL MATHS TROPHY · 2s FACTS

Global Maths Trophy

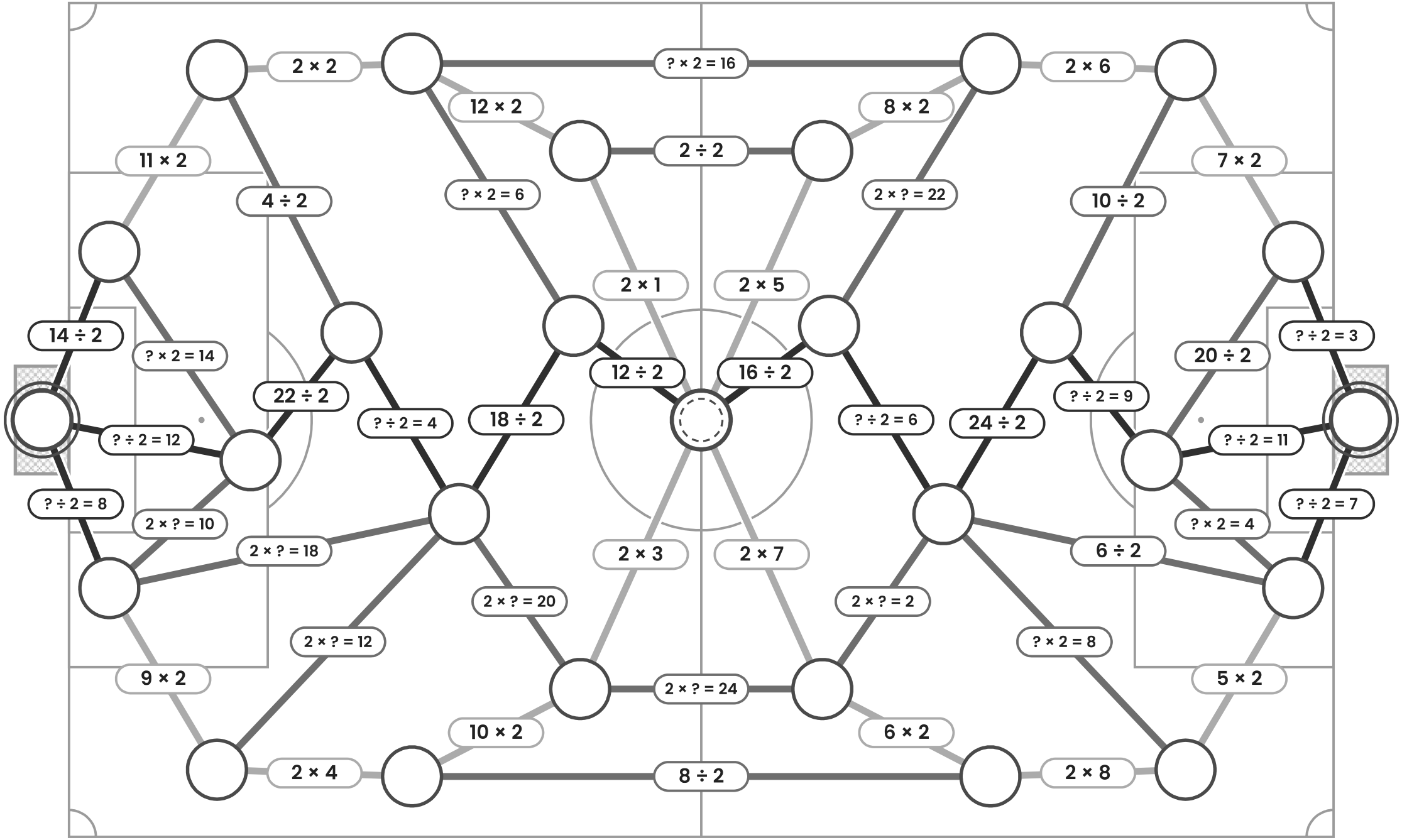

rethink maths

GLOBAL MATHS TROPHY · 2s FACTS

Global Maths Trophy

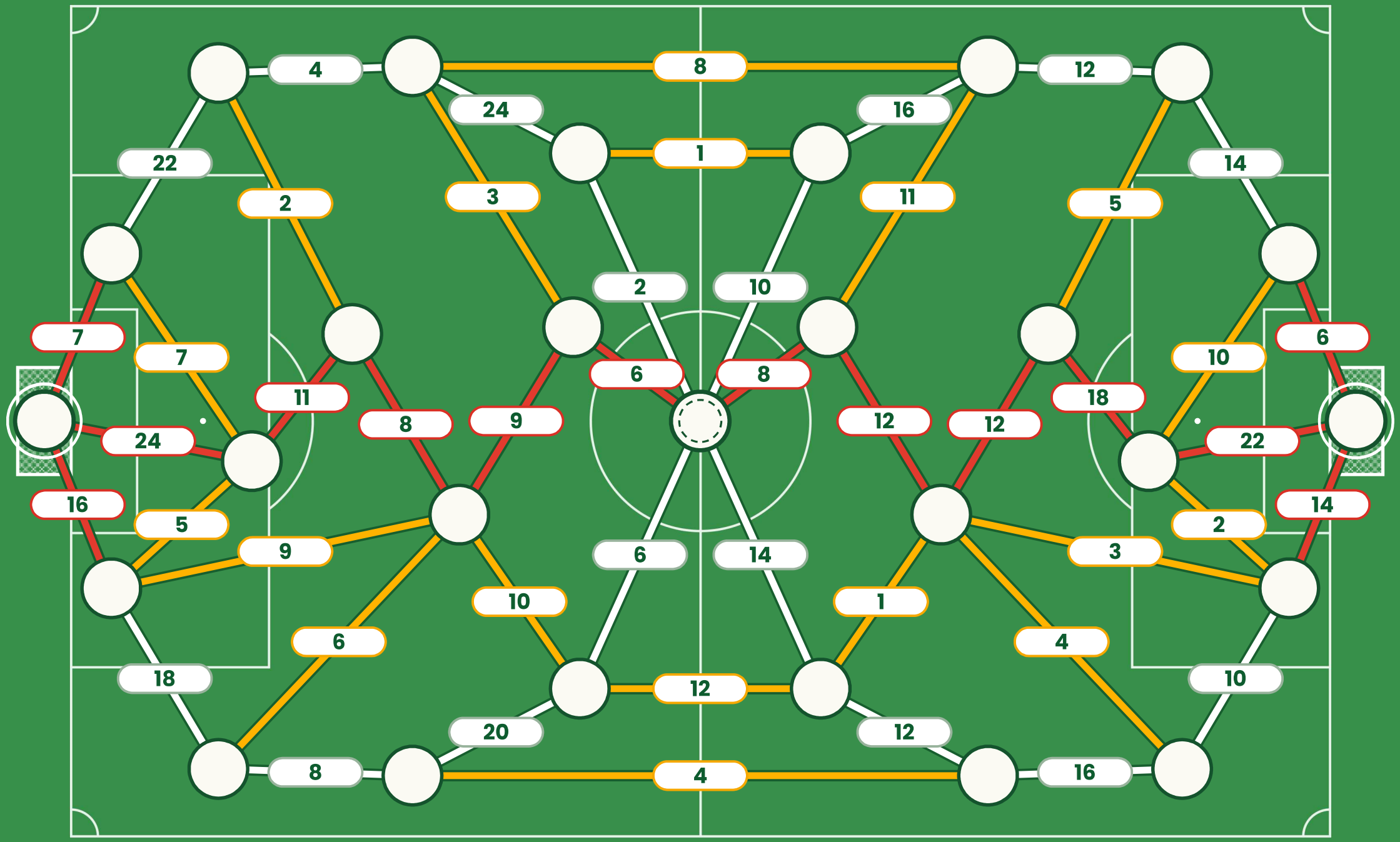

rethink maths

GLOBAL MATHS TROPHY · 2s ANSWERS

Global Maths Trophy