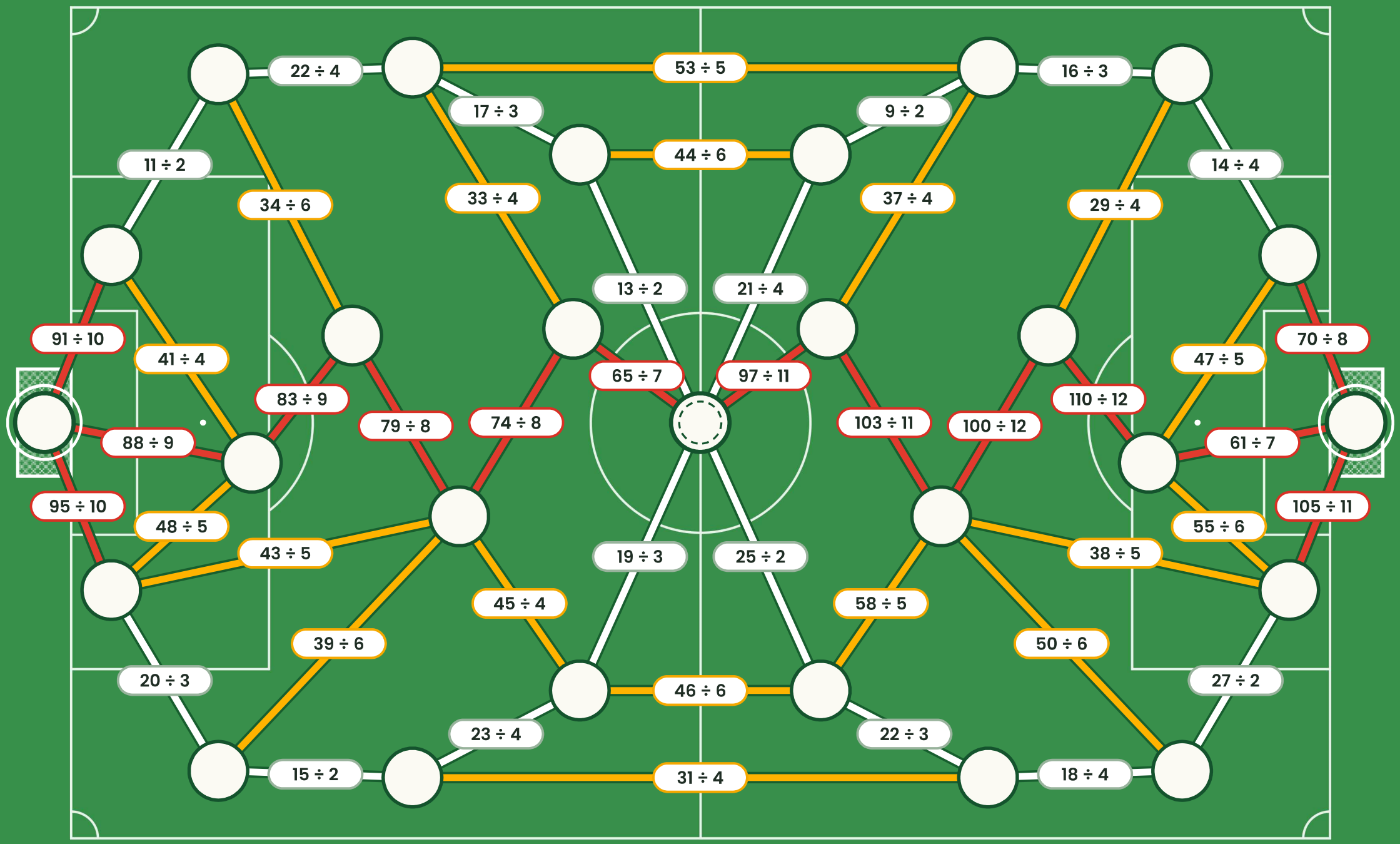

rethink maths

GLOBAL MATHS TROPHY · DIVISION WITH REMAINDERS

Global Maths Trophy

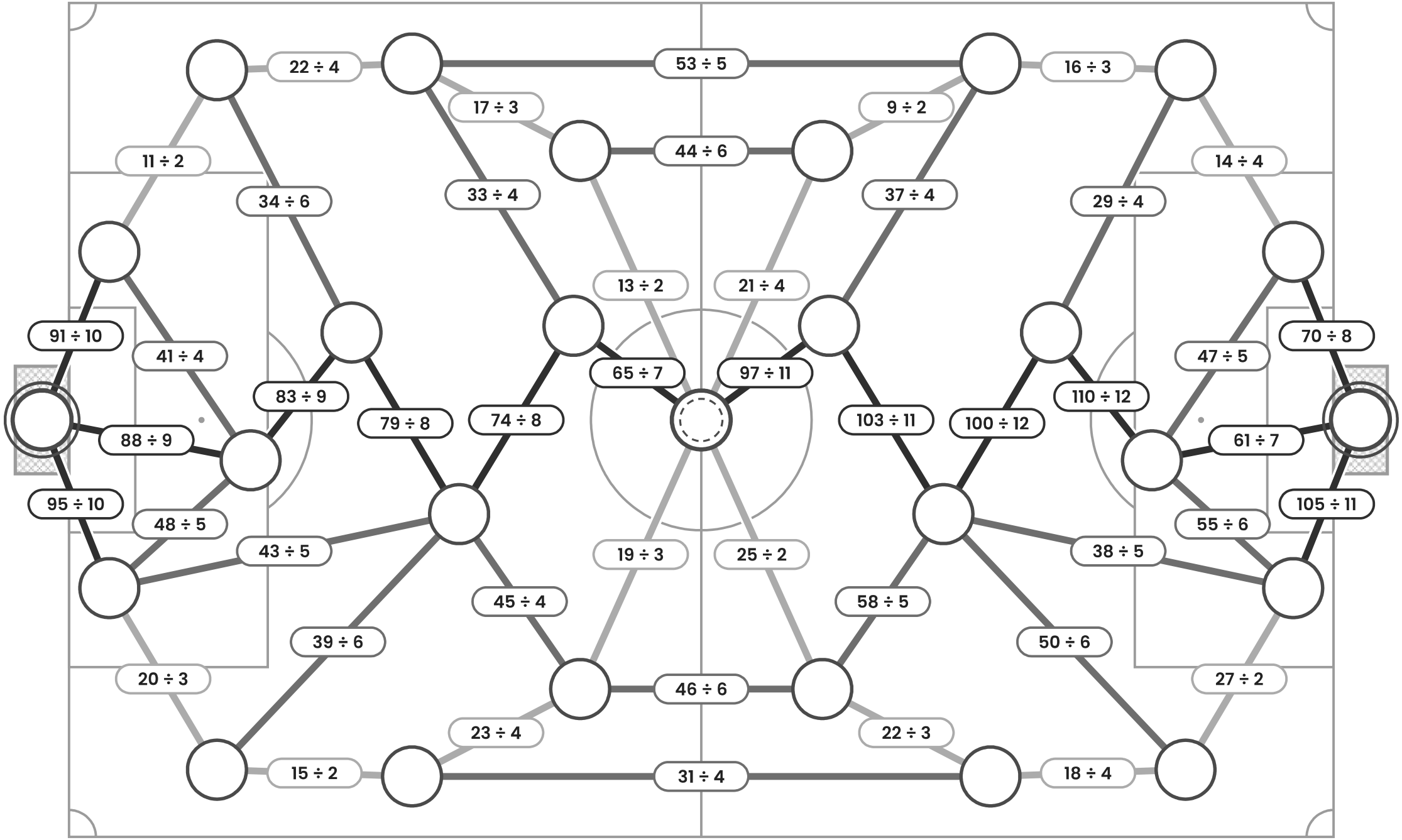

rethink maths

GLOBAL MATHS TROPHY · DIVISION WITH REMAINDERS

Global Maths Trophy

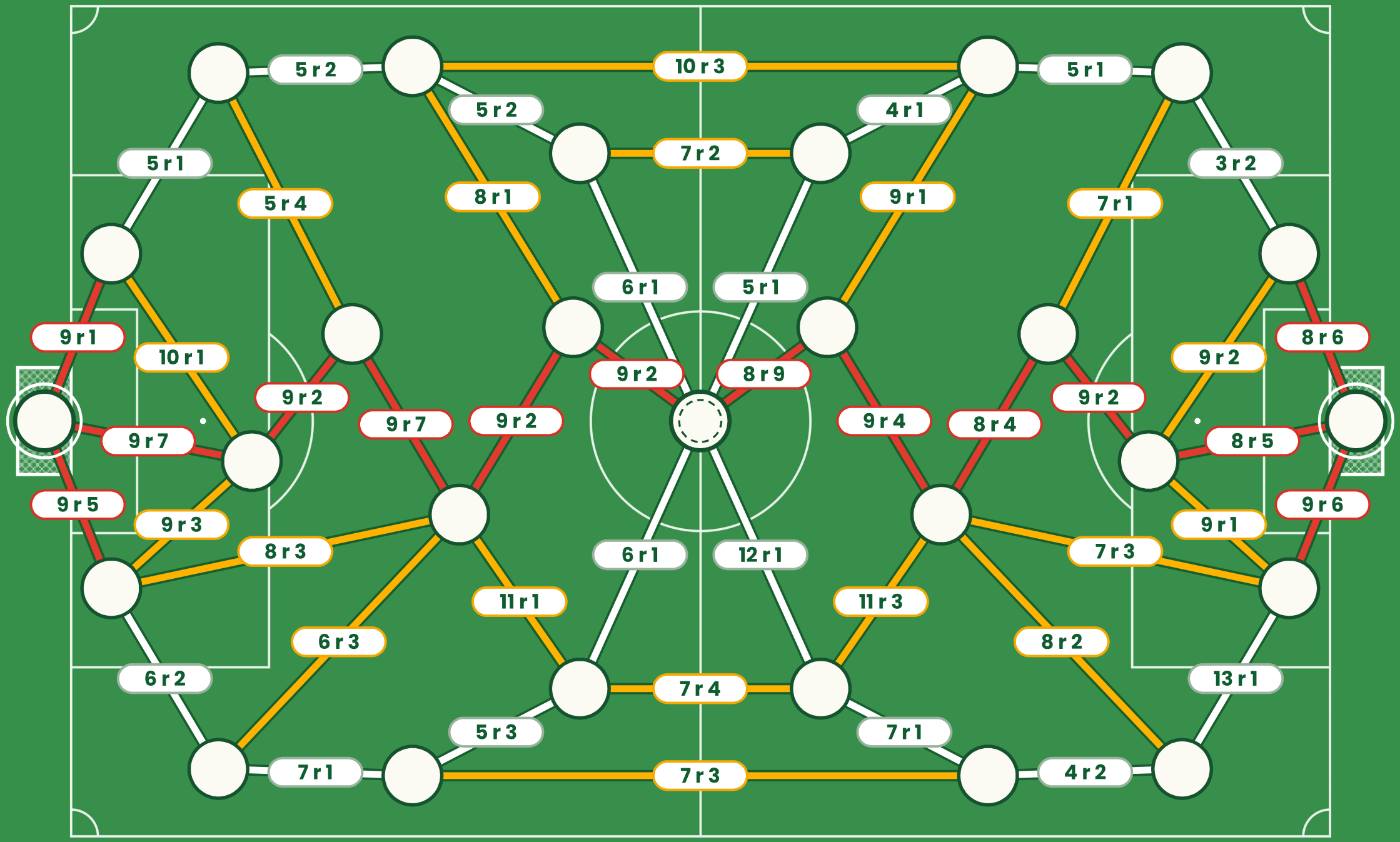

rethink maths

GLOBAL MATHS TROPHY · REMAINDERS · ANSWERS

Global Maths Trophy