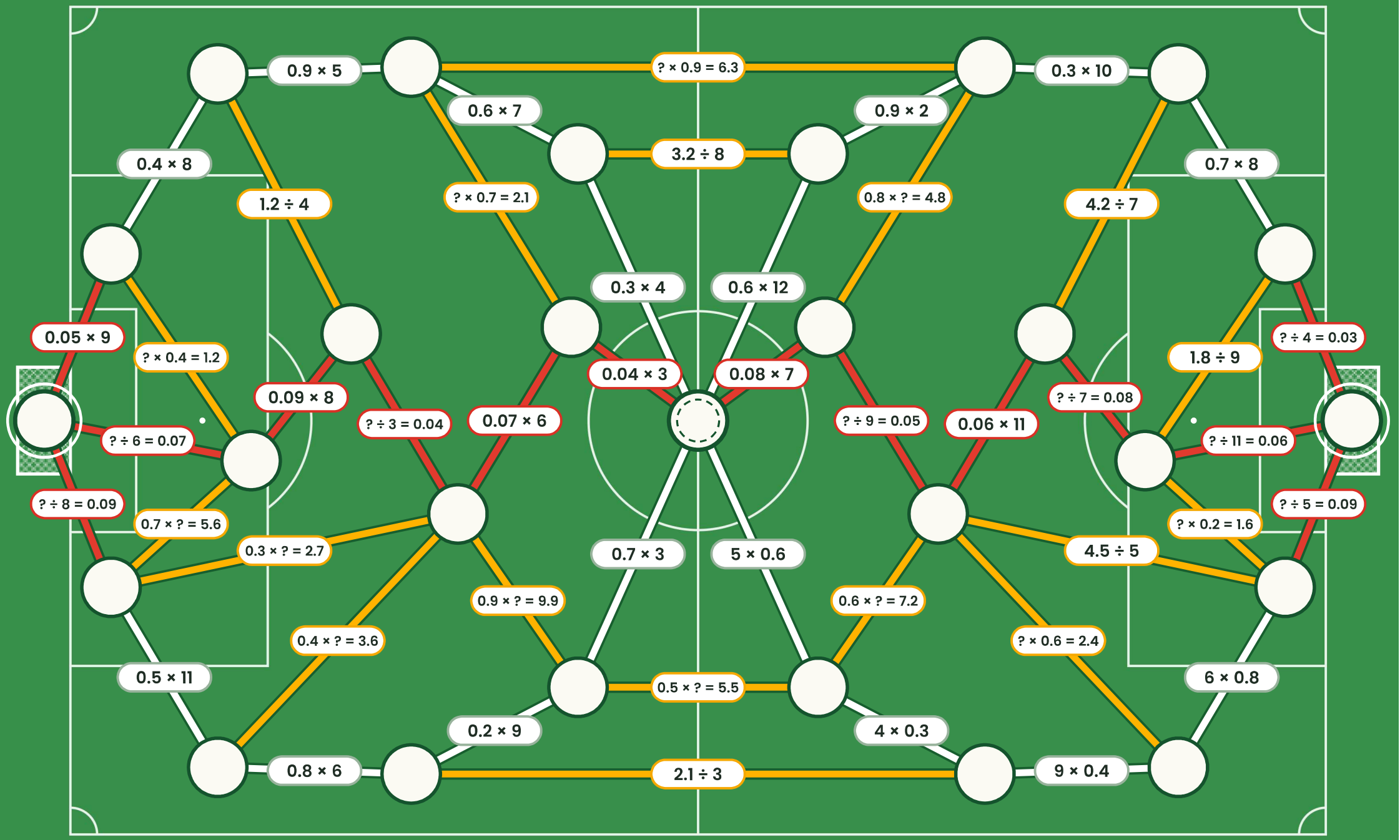

rethink maths

GLOBAL MATHS TROPHY · DERIVED FACTS: DECIMALS

Global Maths Trophy

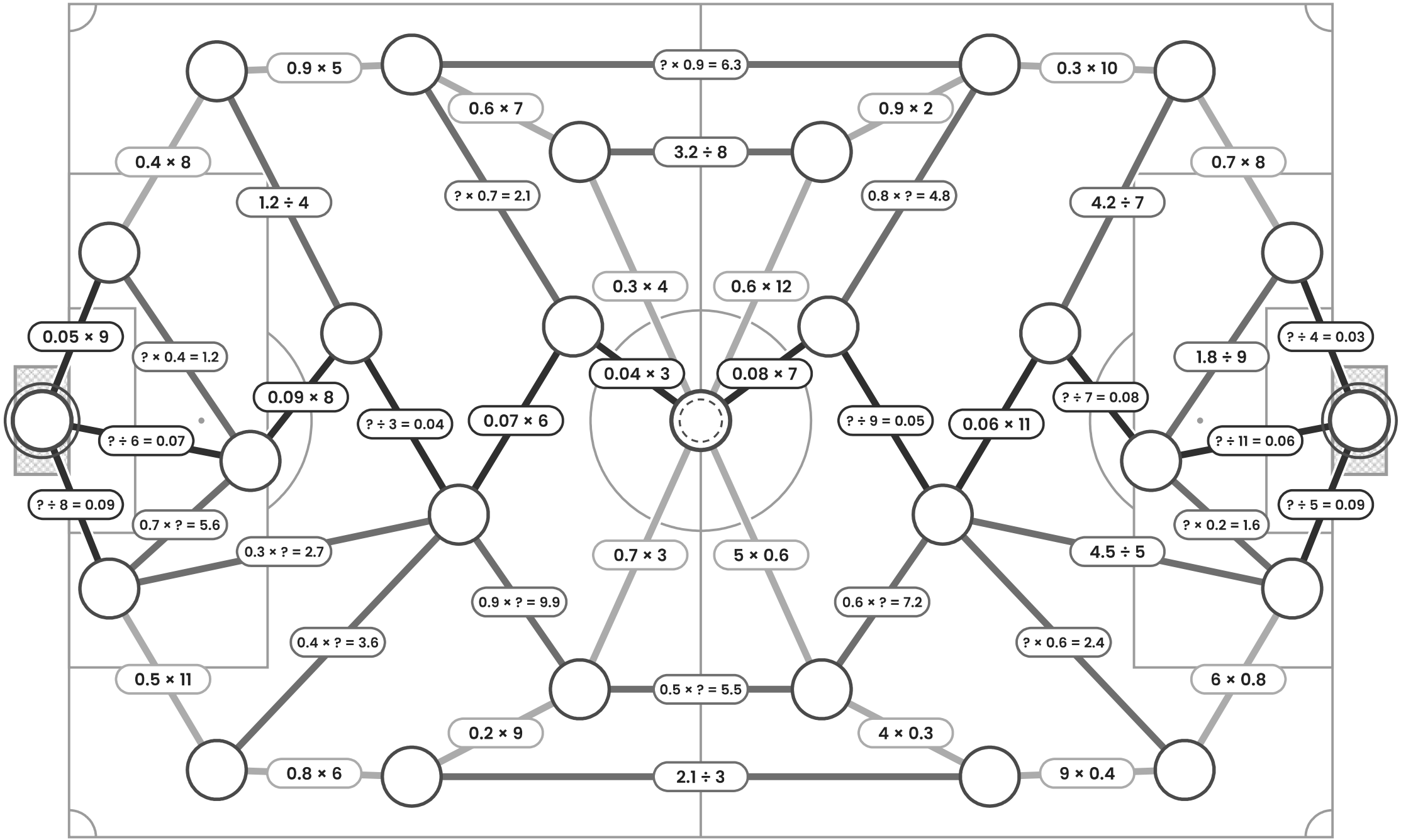

rethink maths

GLOBAL MATHS TROPHY · DERIVED FACTS: DECIMALS

Global Maths Trophy

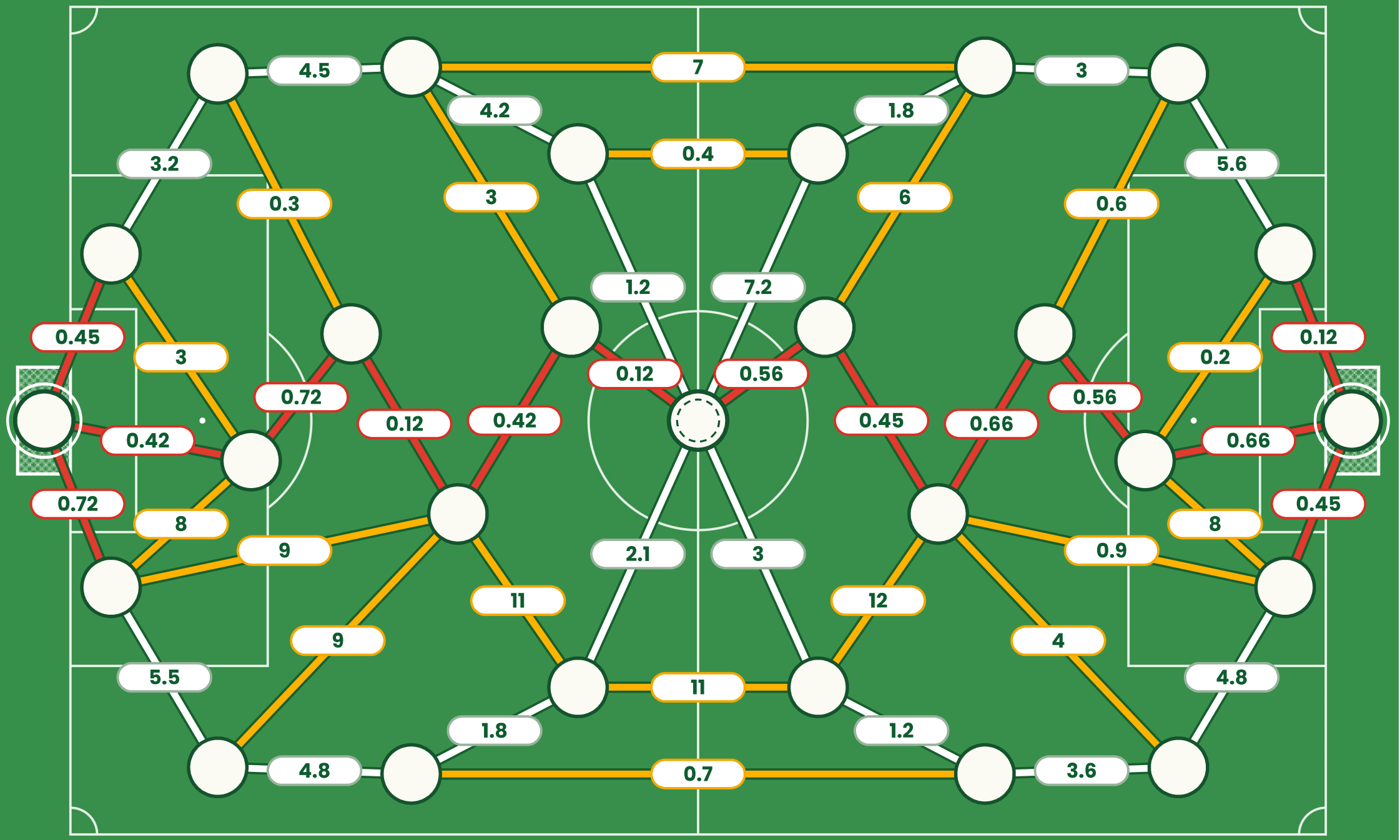

rethink maths

GLOBAL MATHS TROPHY · DECIMALS · ANSWERS

Global Maths Trophy