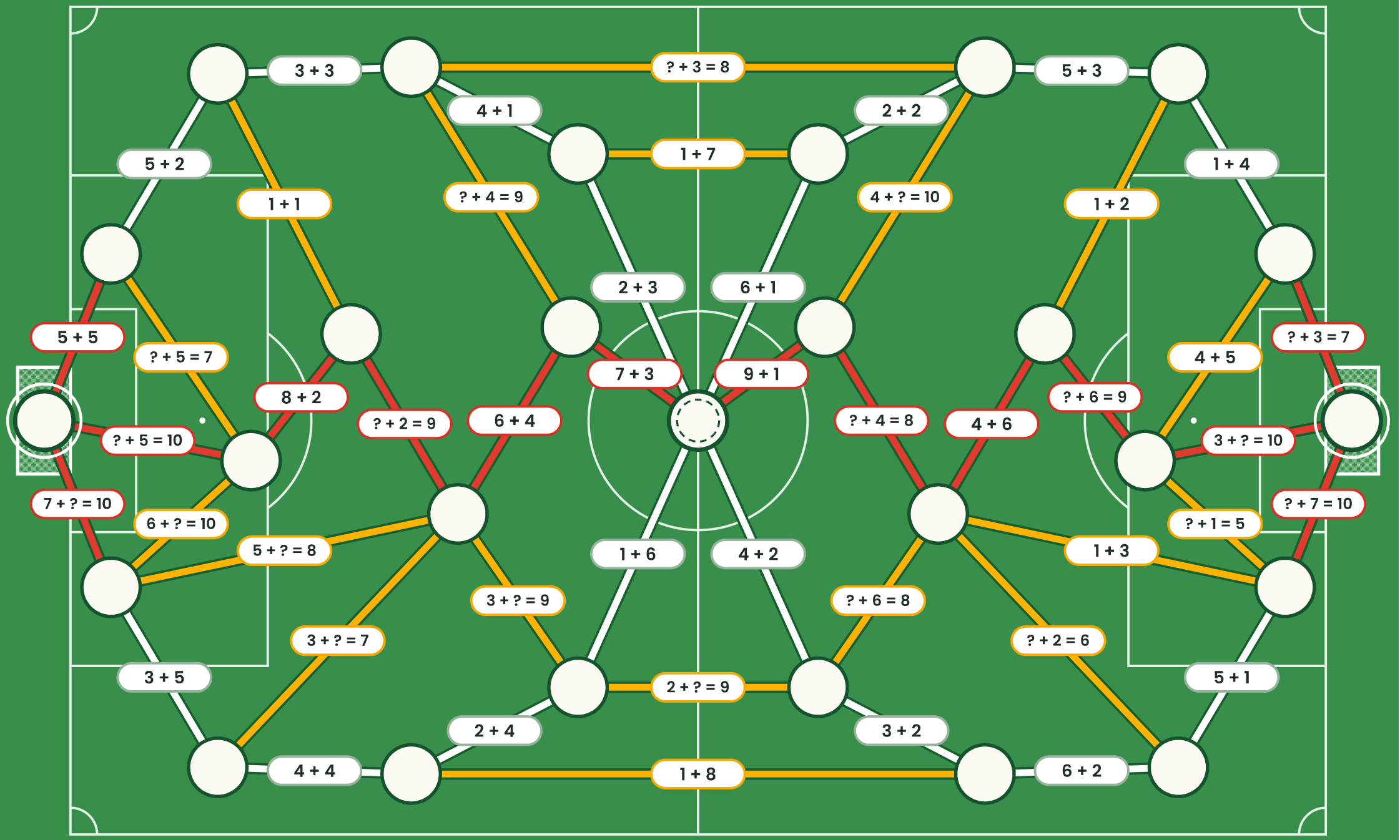

rethink maths

GLOBAL MATHS TROPHY · WITHIN 10

Global Maths Trophy

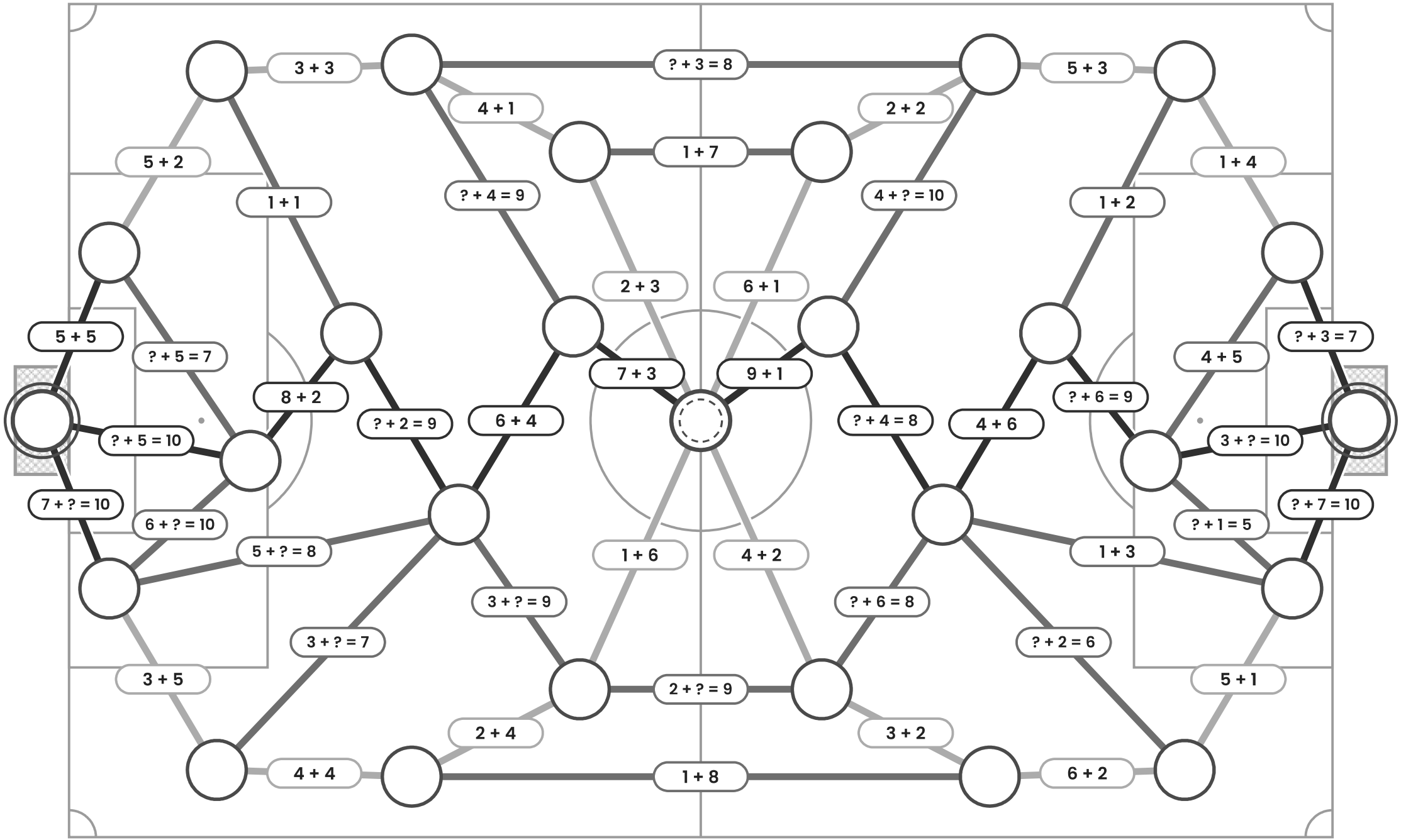

rethink maths

GLOBAL MATHS TROPHY · WITHIN 10

Global Maths Trophy

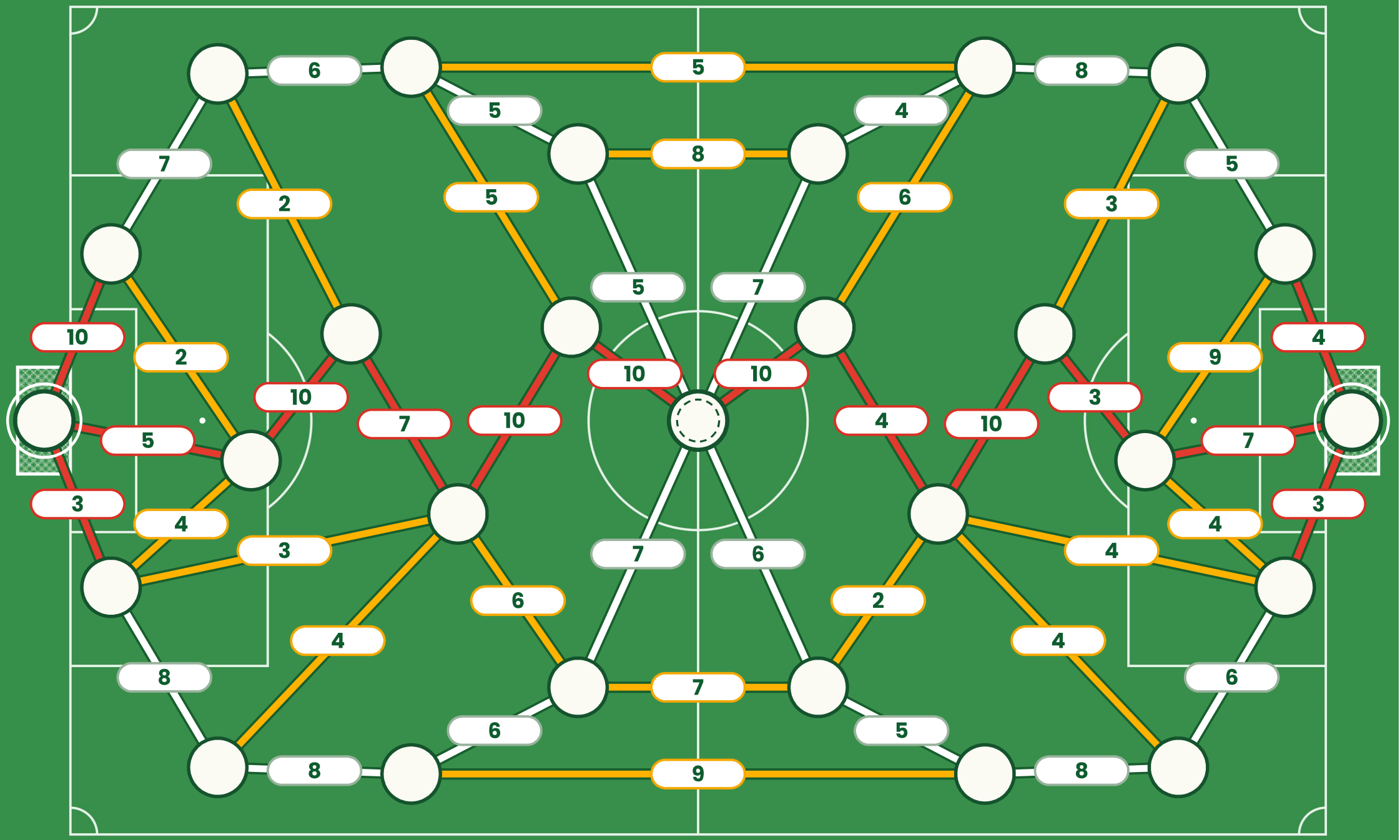

rethink maths

GLOBAL MATHS TROPHY · WITHIN 10 · ANSWERS

Global Maths Trophy